proceedings

MDPI

Proceedings

Developing and Researching a Robotic Arm for Public Service and Industry to Highlight and Mitigate Its Inherent Technical Vulnerabilities †

Florin Covaciu [1], Persida Bec [2] and Doru-Laurean Băldean [1,*]

[1] Design Engineering and Robotics Department, Faculty of Machines Building, Technical University of Cluj-Napoca, 103-105 Muncii, 400641 Cluj-Napoca, Romania; florin.covaciu@muri.utcluj.ro

[2] Ethics of Vulnerabilities Group, Faculty of Philosophy, Babes-Bolyai University, Kogălniceanu 1, 400084 Cluj-Napoca, Romania; bec.persida@gmail.com

* Correspondence: doru.baldean@auto.utcluj.ro or dorubaldean@yahoo.com; Tel.: +40-264-202-790

† Presented at the 14th International Conference INTER-ENG 2020 Interdisciplinarity in Engineering, Mureș, Romania, 8–9 October 2020.

Published: 15 December 2020

Abstract: The present study highlights the design and testing of a robotic arm and its vulnerabilities. The purpose of this paper is to develop, manufacture, test, and improve the robotic arm as a separate system. Additionally, its actuators in operation and the evaluation of challenges in Strengths, Weaknesses, Opportunities, and Threats (SWOT) analysis (or vulnerability assessment) are considered. The specific objective consists in designing the robot's actuators to generate effective work and torque in operational conditions of the external environment in which are found objects that have a resistance force. Another secondary specific objective is to realize an automatic loop with a corresponding architecture based on a previously stressed actuator configuration.

Keywords: robotic arm; automatics; controls; manufacturing; vulnerability

1. Introduction

When introduced to robotics [1] and automation [2], some individuals are convinced that these kinds of applications are destined only for the industry field or just for technological research and development [3]. Anyway, the purpose and objective of robotics and automation [4,5] consists in assisting human activities [6,7] both working in the industry and in performing daily tasks at home, the office, or in public areas [8,9]. To merge the limits of the common knowledge and the actual reality of robotics, an internet connection must be introduced and used [10]. One robotic arm has been created [3] in the Swiss Federal Laboratories for Materials Testing and Research to highlight its capacity to work based on a specific technology [11]. Thus, an actuator with a dielectric elastomer (DE) was implemented in a robotic arm. It allowed the system to benefit from a few of the material's unique properties which outlined a special parameter [12]. These groups were among the few organizations which made, in a contest, the pioneering act of matching electro-active polymeric material (EAPM) in a robotic arm to be like a hand. This event was held during a scientific event in San Diego, in 2005. Arm robots placed and exploited within the International Space Station were constructed to perform some important tasks, as follows: building or construction, servicing and maintenance of the station, sustaining some tests and experiments in outer space, capturing free moving systems, performing activities on the station's exterior, and supporting specific research and development. The mobile robotic arm [13] equipment can perform multiple common activities and operations, as follows: video equipment aligning, vehicle positioning, door opening, and recipient moving, as well as displacing, replacing,

and installing a 100-tonne module [14–16]. Security measures and advanced programming are some of the most significant aspects to be treated to achieve the optimal application and operation of robotic arms in inhospitable environments [17–20].

2. Materials and Methods

Mathematical equations of the simulation and the practical determinations are nothing but linear. The method for controlling the robotic arm is partitioned in a dual sequence approach: on the first level is coarse control and, on the second level, is fine management. On the basis of the advanced control hypothesis, one linear regulator is built to get superior control. Large spaces and outer space represent some challenges for the operational procedures of robotic arms. It is a problem to locate objects in a finite volume without physical boundaries. The important question is how to search for something in a limited environment with no material walls? To solve the mentioned challenge, it is recommended to use a chromatic code represented upon the space ground. It will be necessary to read the chromatic panel using a light-detecting sensor facing toward the floor. Another method is by using a bumper as a reference, and thus allowing the robotic arm to move randomly in the working space or in a more precise manner to follow a predefined schematic. The scientific approach may be realized quite efficiently by applying a funnel to move the manipulated components in relation to the bumper. Another approach is by using powerful antennas coupled to touch sensors to support object detection for public health services in open spaces. For locating and finding large objects in the working space, ultra-sonic sensors (USSs) or wireless sensors are used, with the effect of improving operational accuracy, as shown in Figure 1. The static platform (1) is the main support for the main arm, which is the TTLinker board (2), and wireless positioning sensors (3) are controlled by Feetech SCS 15 servomotors (4) to command the displacement of the detection sensor (5). An alternative to a static robotic arm may be developed with a mobile platform (6), with an ESP 32 microcontroller (8) (placed in a safety case), and a Lipo accumulator (9). In this case, a programming and remote-control station (7) is also provided. ESP 32 (with Xtensa 32-bit LX6 CPU) has the role of operating the robotic arm at 160 MHz.

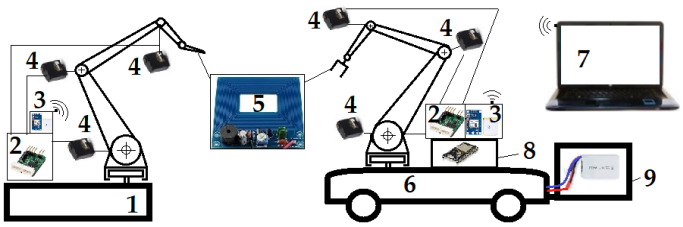

Figure 1. Schematic representation of components linked in the robotic arm assembly for industry.

An Arduino connection to the SCServo needs the TTLinker board. This provides signal conversion. Arduino also converts the universal asynchronous receiver-transmitter (UART) signal into half duplex. The TTLinker has multiple interfaces to receive signals from more sensors (to detect suspicious objects), as shown in Figure 2.

Figure 2. Schematic presentation of Feetech mini-board TTLinker used for connecting SCS15 servos.

Material components and a GPS module may be linked to a computer, notebook, or mobile device with a USB to UART converter. It may be accessed with the U-center app and is compatible with many flight control modules that have GPS virtual testing programs. Pin connections are given in Table 1.

Table 1. Centralized data regarding the pin connections between the GPS module and ESP 32.

Transmitter	Receiver	Observations
ESP 3.3V	GPS VCC	NEO-6M U-Blox chip
ESP GND	GPS GND	-----||-----
ESP RX	GPS TX	-----||-----
ESP TX	GPS RX	-----||-----

3. Development and Results

The results consist in the findings from the simulation and experimental testing of controls for a dual-tasking robot arm. The mathematical equations for a dual-tasking experimental robotic arm have been verified thoroughly. This robotic arm has two rotation degrees of freedom and one degree of freedom in translation, which results in a three-dimensional workspace. The workload is specified by adding auxiliary mass to the robotic arm end. The numerical and experimental results are highlighted in the present paper, consisting in design plans, dimensioning, and digital modeling with Computer Aided Design (CAD) programs, as presented in Figure 3.

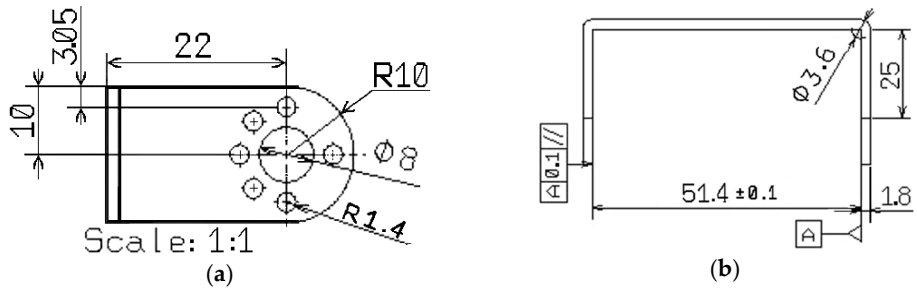

Figure 3. CAD virtual model of servo bracket to present and define the geometric parameters: (**a**) 2D drawing in the front view of the bracket; (**b**) bottom view of the servo bracket for the robotic arm.

The following step is the virtual modeling of the sensor holder in a 2D drawing and 3D representation, as shown in Figure 4.

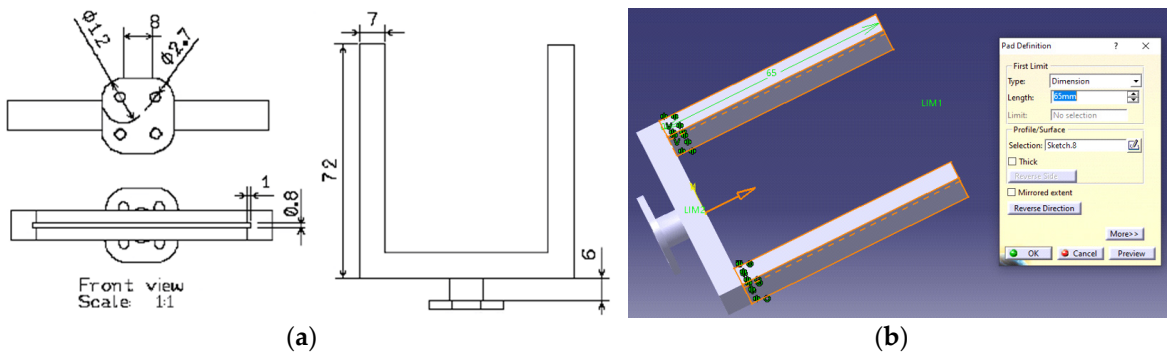

Figure 4. Virtual development of the end part of the robotic arm sensor holder with Computer Aided Design (CAD): (**a**) 2D drawing of the sensor holder; (**b**) representation of a 3D model designed as a mine detection sensor holder.

The next step of the research and development process for a robotic arm for public health service and industry consists in coupling the electric accumulator to the structure, as shown in Figure 5.

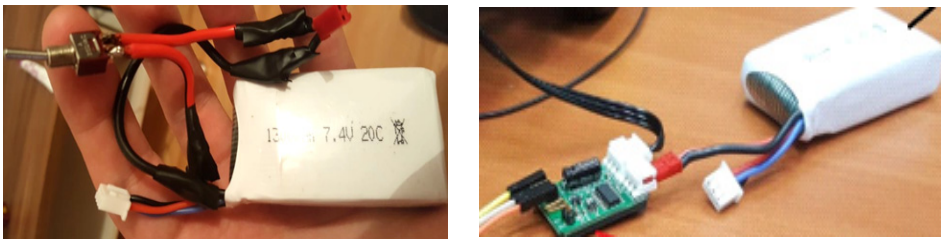

(**a**) (**b**)

Figure 5. Different types of electric accumulator connection to the robotic arm application for testing: (**a**) accumulator connected to the robotic arm through a switcher; (**b**) connection to the TTLinker board.

For testing the operational capability of the robotic arm in the public health service and industry, it was installed on a mobile platform, as shown in Figure 6.

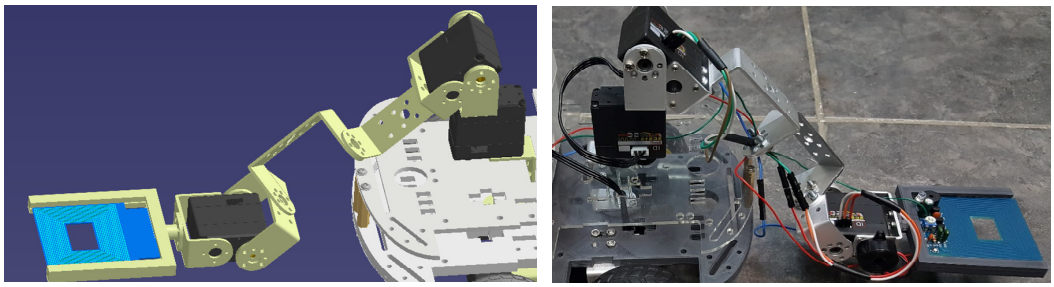

(**a**) (**b**)

Figure 6. Robotic arm in laboratory-stage development: (**a**) CAD version; (**b**) practical test version.

The final stages of the robotic arm development consist in programming the control interface and user commands, through which the servo motors may be actuated or stopped, as shown in Figure 7.

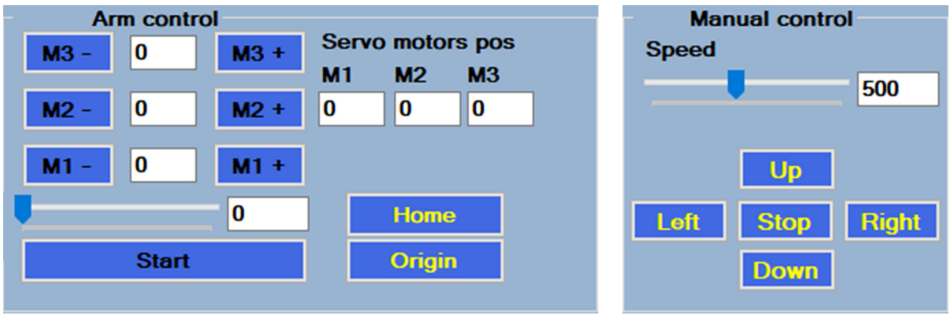

(**a**) (**b**)

Figure 7. Configuring the control panel: (**a**) robotic arm control with servo motors; (**b**) manual control.

The general interface developed in a Microsoft package with Visual Studio is shown in Figure 8.

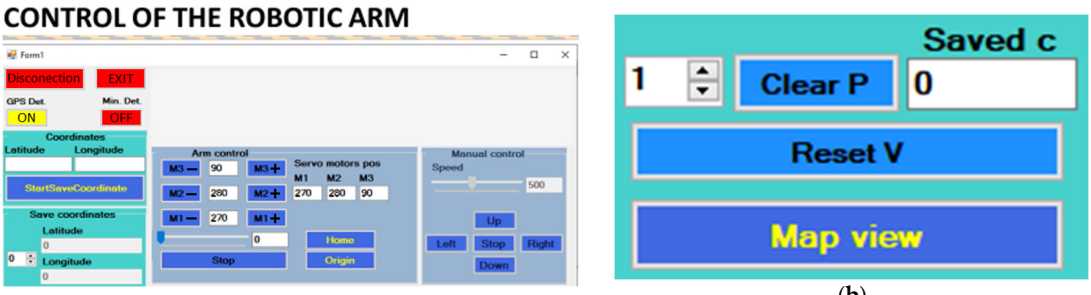

(**a**) (**b**)

Figure 8. User control interface and the saving tool for coordinates: (**a**) general view; (**b**) reset button.

Required torque may be calculated with the following mathematical relations (1) and (2):

$$M = (m \cdot a \cdot v \cdot k)/\omega, \quad (1)$$

$$M = (F_i \cdot v \cdot k)/\omega, \quad (2)$$

where M is the calculated torque requirement; m—mass of the load, in kg; a—acceleration of the robot a = 2 m/s^2; F_i—inertial force, in N; v—velocity, in m/s; ω—angular velocity, in rad/s; k—operation factor (k = 1.5). Forces are simulated for low-carbon steel, known as mild steel, that has a 0.05 ÷ 0.3 carbon content.

To build the actual size model of the crane/spatial structure, for implementing the sensor's support of the robotic arm, a frame with nodes and constraints which facilitated the analysis of the assembly's behavior and validation of the model was designed, as shown in Figure 9.

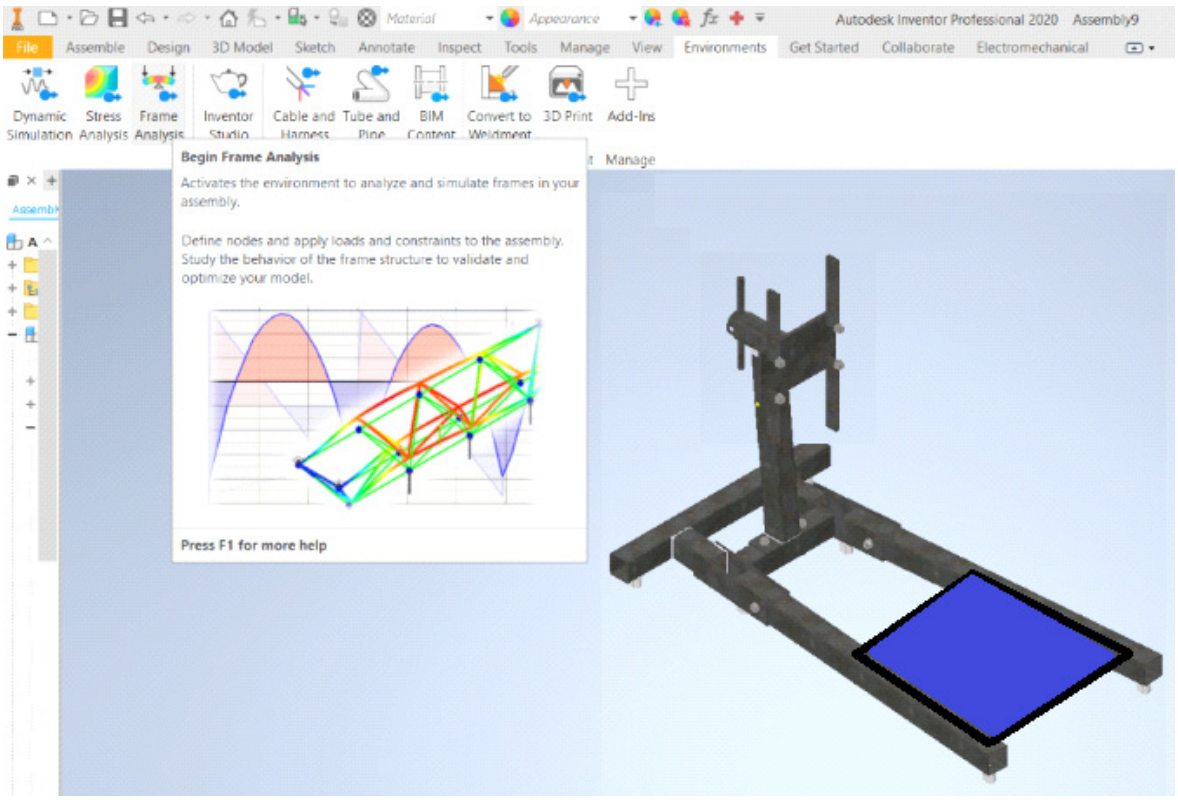

Figure 9. Mechanical structure of the arm developed in CAD stage to begin stress frame analysis.

The design and virtual modeling of the sensor's supporting structure activates the simulation possibilities of the environment to study stresses of the frame in the assembly. To test the resistance and displacement capability of the mechanical assembly low-end arm, a force was placed on the structure, as shown in Figure 10. The red line indicates the most vulnerable area of the assembly.

Additional stages in the study of the structural stresses of the robotic arm consist in the determination of the vertical force effects on the individual components and the bending stress on the spatial wire frame, as shown in Figure 11. The sensor support may take a bending stress of 3.5 MPa on the joint.

Some important observations regarding the robotic arm analysis and development consist in highlighting strengths, weaknesses, opportunities, and threats in implementing and using such structures. The robotic arm is designed and proposed to be tested on a mobile platform for service.

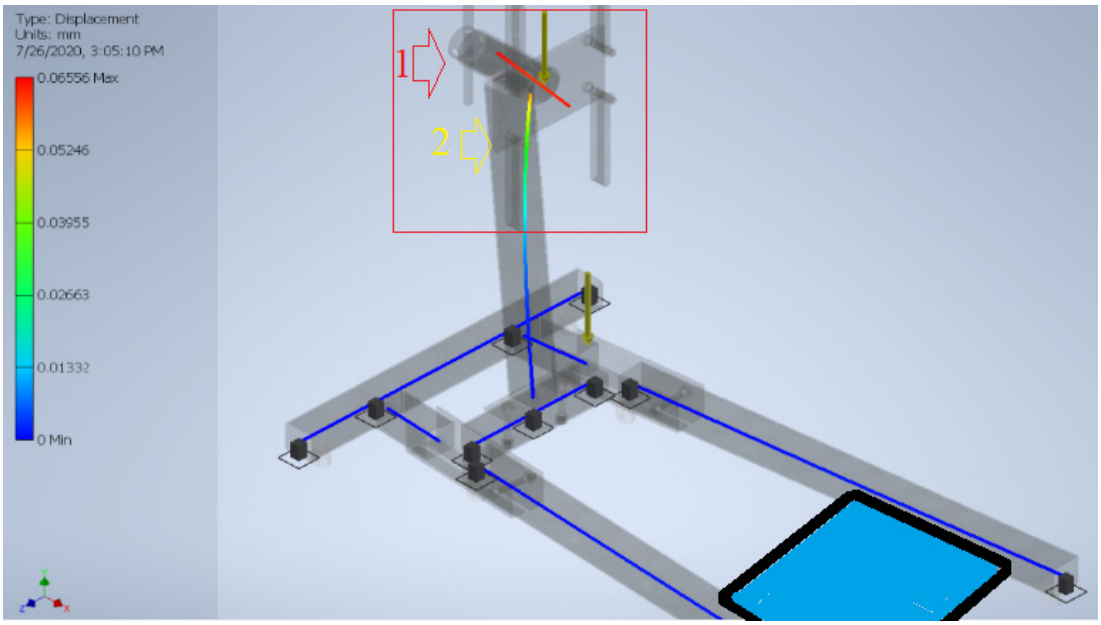

Figure 10. Robotic arm in displacement analysis stage: (**a**) critical area; (**b**) second-level displacement.

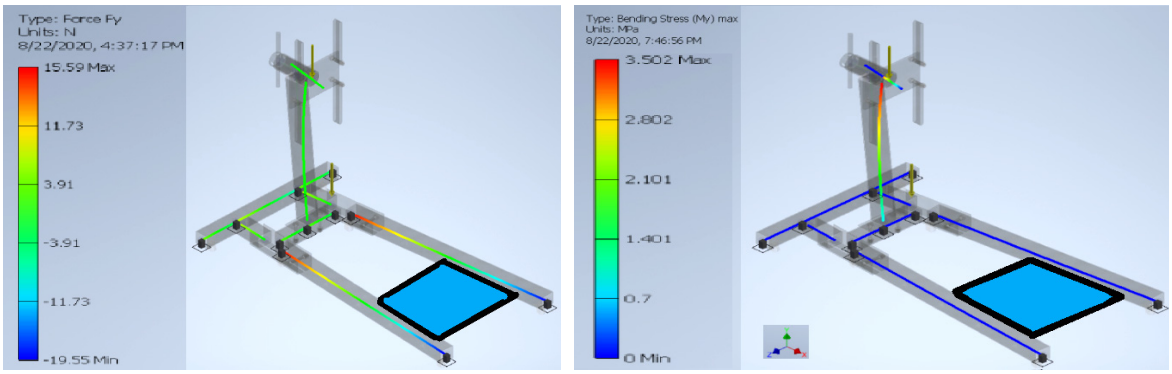

(**a**) (**b**)

Figure 11. Virtual analysis of the sensor's support regarding: (**a**) vertical force; (**b**) bending stress.

4. Discussions and Conclusions

The practical research through the design and development of a robotic arm for public service and industry in order to highlight and mitigate its inherent vulnerabilities is supported on a specific presentation of strengths, weaknesses, opportunities, and threats (SWOT), facts given in Table 2. To analyze these problems, specialized testing procedures were applied to the robotic arm. Considering this statement, it is also postulated that aspects around the topic are handled in a practical engineering manner. Vulnerabilities of the robotic arm influence the overall operation of the system.

Table 2. Practical data regarding the strengths, weaknesses, opportunities, and threats (SWOT) analsise for assessing vulnerabilities.

Strengths	Weaknesses	Opportunities	Threats
Complete force control	Complex programs	More jobs	Failures and events
Selfless intel	No empathy	Escaping arrogance	Hacking
Performance in operation	Volatile memory	Rapid connection	Data losses
Remote operation	Intercepting incidents	Improving efficiency	Cyber hacks

Applying the SWOT analysis method for defining the vulnerabilities concerning the robotic arm equipment in operation has allowed us to assess the stringent problems and to optimize the use of automated and intelligent systems for public service and for industrial applications.

The contributions consist in designing the robotic arm and modeling in simulation programs to validate the proposed solution. Additionally, an experimental laboratory model has been designed and created to check vulnerabilities and faults in the project before serial production and further development. ESP 32 runs properly on the lab mini model and must be replaced with a stronger CPU.

The comparison between the present paper's achievements and other studies is given in Table 3.

Table 3. Comparative parameters of the robotic arm analyzed in the present paper and other studies.

Research Paper	Robot Type	Platform	Transmission
Aboulissane et al. 2019	Parallel	Mobile	Parallelograms and joints
David Alejo et al. 2019	Six-wheeled	Drivable robotic platform	Mechanical
Kadir et al. 2012	Robotic arm	Static platform	Mechanical
Present study	Robotic arm	Mobile platform	Spatial assembly and joints

The present research contributes to the field of robotic arms by increasing the experience and knowledge regarding the process of the design, development, optimization, and control of these instruments. Quantitatively, the sensor support takes a 15 N force on the y direction in operation.

Automation and robotics in manufacturing and servicing are some of the most important research topics in engineering and technology today. The present paper deals with the automatic processes and control procedures of a robotic arm designed and tested in robotics laboratory.

In the present paper were underlined the sequences of developing and researching a robotic arm intended to be used in the health service and industry to highlight and mitigate its inherent technical vulnerabilities. Thus, the components linked together in the robotic arm assembly were represented.

The vulnerabilities consist in detection sensor safety in operation and the arm's flexible joints' effect upon electric wires. They must be protected and secured from numerous alternative displacements or movements. Bending stress, reaching more than 3.5 MPa, also has a negative effect on the arm.

The most important technical concerns are the control and performance of the robotic arm during operation. It is an actual problem to control and limit the accurate displacement.

Robotic arm tools may be useful to enhance the productivity and safety of some workers due to the remote access at some sites and more time can be reserved for research and study in non-operational tasks. Anyway, this situation leads to some specific problems and vulnerabilities, such as failures, complex programs, data losses, and eventual cyber hacks.

The most notable vulnerabilities that were highlighted by the present development were found firstly in the design process and secondly in the testing of the robotic arm. In the primary phase of the research and development of the robotic arm for hazardous environments, the outlined vulnerabilities are the factual aspects that actual operational data are hardly able to be recreated and implemented in the beginning. The important considered data are related considerably to the kinematics and dynamical aspects of the robotic arm. The second set of vulnerabilities are the highly complicated programmed learning of artificial intelligence, that consists in a finite phase by a phase sequence and leads to variable results during operation time. The applied tests have shown many other vulnerabilities because there is no human operator involved continuously and the machine learning program must adapt to the task via a training session. Anyway, in the present industry, there are operational static robotic arms, but mobile robots (placed on moving platforms, such as the presented one from this paper) are a work in progress and need to be further studied and optimized.

Author Contributions: Conceptualization, F.C. and D.-L.B.; methodology, D.-L.B.; software, F.C.; validation, P.B., D.-L.B., and F.C.; formal analysis, D.-L.B.; investigation, P.B.; resources, P.B.; data curation, D.-L.B.; writing—original draft preparation, F.C.; writing—review and editing, D.-L.B.; visualization, D.-L.B.; supervision, P.B.; project administration, D.-L.B.; funding acquisition, P.B. All authors have read and agreed to the published version of the manuscript.

Funding: This research project was co-funded by the European Social Fund.

Acknowledgments: This paper was supported by the project "Entrepreneurial competences and excellence research in doctoral and postdoctoral programs-ANTREDOC" co-funded by the European Social Fund.

Conflicts of Interest: The authors declare no conflict of interest.

References

1. Aboulissane, B.; El Haiek, D.; El Bakkali, L.; El Bahaoui, J. On the Workspace Optimization of Parallel Robots Based on CAD Approach. In Proceedings of the 12th International Conference Interdisciplinarity in Engineering (INTER-ENG 2018), Targu Mures, Romania, 4–5 October 2018; Moldovan, L., Gligor, A., Eds.; Elsevier: Amsterdam, The Netherlands, 2019; Volume 32, pp. 1085–1092.
2. Alejo, D.; Mier, G.; Marques, C.; Caballero, F.; Merino, L.; Alvito, P. SIAR: A Ground Robot Solution for Semi-autonomous Inspection of Visitable Sewers. In *Advances in Robotics Research: From Lab to Market*; Grau, A., Morel, Y., Puig-Pey, A., Cecchi, F., Eds.; Tracts in Advanced Robotics; Springer: London, UK, 2019; Volume 132, pp. 275–296.
3. Andrei, L.; Băldean, D.; Borzan, A.I. Applied Measurements and Instrumentation for Improving Diagnostic Devices and Systems in Metropolitan Polluted Environments with Nitric and Carbon Oxides. In Proceedings of the 6th International Conference on Advancements of Medicine and Health Care through Technology, Cluj-Napoca, Romania, 17–20 October 2018; Vlad, S., Roman, N., Eds.; Springer: London, UK, 2019; Volume 46, pp. 45–49.
4. Bar-Cohen, Y. *Biomimetics: Biologically Inspired Technologies*; Taylor & Francis: New York, NY, USA, 2006.
5. Băldean, D.L.; Covaciu, F. Developing the communication of autonomous vehicles controlled with the aid of artificial intelligence for person and capital safety. *Saf. Person Constr. Soc. Cap.* **2020**, *1*, 478–484.
6. Băldean, D.L.; Covaciu, F.A. Robotic Art in Creation and Development of Innovative Shapes and Programs for Automated Driven Cars with Artificial Intelligence. *J. Soc. Media Inq.* **2020**, *2*, 22–39. [CrossRef]
7. Bec, P.; Borzan, A.I.; Frunză, M.; Băldean, D.L.; Berindei, I. Study of Vulnerabilities in Designing and Using Automated Vehicles based on SWOT method for Chevrolet Camaro. In Proceedings of the IOP Conference Series: Materials Science and Engineering, Oradea, Romania, 28–29 May 2020; Grebeni, G., Roman, N., Eds.; IOP Publishing: Bristol, UK, 2020. [CrossRef]
8. Borzan, A.I.; Băldean, D.L. The Development of a New Interface for Intelligent Control of Energy Supply in Dynamic Environment with Process Digitization. In Proceedings of the 13th International Conference Interdisciplinarity in Engineering (INTER-ENG 2019), Targu Mures, Romania, 3–4 October 2019; Procedia Manufacturing; Moldovan, L., Gligor, A., Eds.; Elsevier: Amsterdam, The Netherlands, 2020; Volume 46, pp. 1–6.
9. Gao, Z.; Wanyama, T.; Singh, I.; Gadhrri, A.; Schmidt, R. From Industry 4.0 to Robotics 4.0-A Conceptual Framework for Collaborative and Intelligent Robotic Systems. *Procedia Manuf.* **2020**, *46*, 591–599. [CrossRef]
10. Kadir, W.M.H.W.; Samin, R.E.; Ibrahim, B.S.K. Internet Controlled Robotic Arm. *Procedia Eng.* **2012**, *41*, 1065–1071. [CrossRef]
11. Kobayashi, Y.; Harada, K.; Takagi, K. Automatic controller generation based on dependency network of multi-modal sensor variables for musculo skeletal robotic arm. In *Robotics and Autonomous Systems*; Elsevier: Amsterdam, The Netherlands, 2019; Volume 118, pp. 55–65. [CrossRef]
12. Mrozik, D.; Mikolajczyk, T.; Moldovan, L.; Pimenov, D.Y. Unconventional Drive System of a 3D Printed Wheeled Mobile Robot. In Proceedings of the 13th International Conference Interdisciplinarity in Engineering (INTER-ENG 2019), Targu Mures, Romania, 3–4 October 2019; Procedia Manufacturing; Moldovan, L., Gligor, A., Eds.; Elsevier: Amsterdam, The Netherlands, 2020; Volume 46, pp. 509–516.

13. Oltean, S.E. Mobile Robot Platform with Arduino Uno and Raspberry Pi for Autonomous Navigation. In Proceedings of the 12th International Conference Interdisciplinarity in Engineering (INTER-ENG 2018), Targu Mures, Romania, 4–5 October 2018; Procedia Manufacturing; Moldovan, L., Gligor, A., Eds.; Elsevier: Amsterdam, The Netherlands, 2019; Volume 32, pp. 572–577.
14. Syreyshchikova, N.V.; Pimenov, D.Y.; Mikolajczyk, T.; Moldovan, L. Automation of Production Activities of an Industrial Enterprise based on the ERP System. In Proceedings of the 13th International Conference Interdisciplinarity in Engineering (INTER-ENG 2019), Targu Mures, Romania, 3–4 October 2019; Procedia Manufacturing; Moldovan, L., Gligor, A., Eds.; Elsevier: Amsterdam, The Netherlands, 2020; Volume 46, pp. 525–532.
15. Shah, R.; Pandey, A.B. Concept for Automated Sorting Robotic Arm. In Proceedings of the 2nd International Conference on Materials Manufacturing and Design Engineering, Tg. Mures, Romania, 4–5 October 2018; Procedia Manufacturing; Elsevier: Amsterdam, The Netherlands, 2018; Volume 20, pp. 400–405.
16. Tokody, D.; Ady, L.; Hudasi, L.F.; Varga, P.J.; Hell, P. Collaborative Robotics Research: Subiko Project. In Proceedings of the 13th International Conference Interdisciplinarity in Engineering (INTER-ENG 2018), Targu Mures, Romania, 3–4 October 2019; Procedia Manufacturing. Moldovan, L., Gligor, A., Eds.; Elsevier: Amsterdam, The Netherlands, 2020; Volume 46, pp. 467–474.
17. Industrial Robot. Available online: https://en.wikipedia.org/wiki/Industrial_robot (accessed on 16 June 2020).
18. Mechanical Arm. Available online: https://en.wikipedia.org/wiki/Mechanical_arm (accessed on 16 June 2020).
19. Robotic Arm. Available online: https://en.wikipedia.org/wiki/Robotic_arm (accessed on 16 June 2020).
20. Autonomous Robot. Available online: https://en.wikipedia.org/wiki/Autonomous_robot (accessed on 8 June 2020).