sustainability

MDPI

Article

Knowledge Management in Healthcare Sustainability: A Smart Healthy Diet Assistant in Traditional Chinese Medicine Culture

Yang Chi [1], Congcong Yu [1], Xiaohui Qi [1] and Hao Xu [1,2,3,4,*]

[1] College of Computer Science and Technology, Jilin University, Changchun 130012, China; chiyang16@mails.jlu.edu.cn (Y.C.); ccyu17@mails.jlu.edu.cn (C.Y.); qixh17@mails.jlu.edu.cn (X.Q.)
[2] School of Management, Jilin University, Changchun 130012, China
[3] Department of Computer Science and Technology, Zhuhai College of Jilin University, Zhuhai 519041, China
[4] Symbol Computation and Knowledge Engineer of Ministry of Education, Jilin University, Changchun 130012, China
* Correspondence: xuhao@jlu.edu.cn

Received: 28 September 2018; Accepted: 9 November 2018; Published: 14 November 2018

Abstract: In the past 40 years, with the changes to dietary structure and the dramatic increase in the consumption of meat products in developing countries, especially in China, encouraging populations to maintain their previous healthy eating patterns will have health, environmental, and economic co-benefits. Healthy diet education plays an important role in the promotion of people's healthy behavior. However, in the modern age, the data regarding healthy diets available on the internet is increasing rapidly and is distributed on multiple sources. It is time-consuming for users to learn about healthy diets on the internet: they need to search data on multiple platforms, choose and integrate information, and then understand what they have learned. To help people retrieve and learn healthy diet knowledge more efficiently and comprehensively, this paper designs a knowledge graph to integrate healthy diet information on the internet and provides a semantic retrieval system. In the knowledge graph, five main concepts are defined, including food material, dish, nutritional element, symptom, and crowd, as well as the relationships among them. In addition, Chinese dietary culture elements and traditional Chinese medicine (TCM) theory are also contained in the knowledge graph. The preliminary results show that by using the system, users learn healthy diet knowledge more quickly and comprehensively and they are more inclined to have balanced diets. This work could be regarded as a retrieval and education tool, which can assist healthcare and national sustainable development.

Keywords: healthcare sustainability; healthcare education; healthy diet; knowledge graph; traditional Chinese medicine

1. Introduction

The third sustainable development goal of the United Nations is: "Ensure healthy lives and promote well-being for all at all ages" [1]. Healthy food can help people reduce mortality and the risk of contracting illness [2]. For example, fresh fruits and vegetables can guard against chronic diseases, including cardiovascular disease [3], metabolic diseases like obesity and type 2 diabetes mellitus [4], and some kinds of cancer [5,6]. National dietary habits that are high in salt and fat not only cause individual chronic diseases like cancer and cardiovascular disease, but also increases the direct cost of healthcare and indirect costs to the whole society [7], which is a challenge for healthcare and national sustainability. Meanwhile, excessive meat product consumption also puts pressure on environmental sustainability. Comparisons between vegetarian and meat-based diets have illustrated vast differences

in their environmental impact, with a meat-based diet using almost three times more water, thirteen times more fertilizer, and 1.4 times more pesticides than a meat-free diet [8]. Animal-based foods also generate more green-house gas emissions than do plant-based foods [8].

In China, with the increases in income (achieving an 8.5% average annual growth in per capita Gross Domestic Product (GDP) between 1978 and 2012 [9]), the composition of Chinese diets has dramatically changed: China's per capita protein intake nearly doubled from 54 g in 1980 to 94 g in 2009, and its fat intake nearly tripled from 34 g in 1980 to 96 g in 2009 [10]. A large majority of these increases came from a rise in the consumption of animal products [10]. In addition, China's overall per capita calorie consumption levels are well above the global average [10]. Because of the changes in diet and lifestyle, disease in China has shifted from infectious diseases and malnutrition to diseases related to hypertension, coronary heart disease, stroke, and a subset of cancers [11].

A country's sustainable development is closely related to national health [12]. Research shows that the growth of the national economy can be achieved by reducing morbidity and mortality, with a resulting increase in the labor force [13]. However, one study forecasted that in China, the economic costs of physical activity, obesity, and diet-related noncommunicable disease will dominate by 2025, and diet is a major factor underlying these costs [11]. The economic analysis shows that overweight and obesity caused the cost figures to rise dramatically, including direct healthcare costs such as costs of hospitalization, outpatient visits, drugs, etc., and the indirect society costs, the significant factor of which was sick leave [7]. The growth in the costs attributable to overweight and obesity in China will rise from about US $49 billion in 2000 to about US $112 billion in 2025 [7]. In addition, in developing countries, consumers' sensitivity to the cost of healthcare also needs attention. Vuong et al. [14] evaluated the sensitivity of Vietnamese healthcare consumers regarding payment for periodic general health exams. The results showed that healthcare consumers are highly sensitive to the cost—when demographic and socioeconomic-cognitive variables were controlled, the majority of respondents became very reluctant to pay for a health service equal to or above US $90. In this paper, the investigation of 1059 people (in Section 3.1) found that most Chinese people wanted to get healthy dietary suggestions from experts, but 72.14% of them were unable to achieve this because of economic constraints, which prevented them from acquiring healthy diet knowledge and related healthcare services.

In addition the problems in economics and society caused by changes in the national dietary structure, environmental sustainability has also become a concern in China. China's dietary shift from plant-based to animal-based foods, induced by its income growth, is likely to impose considerable pressure on environmental and agricultural resources [10]. Concerns about China's food self-sufficiency have arisen among Chinese policy-makers, especially since China is relatively poorly endowed with agricultural land and water supplies per person [10].

In the healthcare domain, ways of encouraging populations to maintain their traditional healthy eating patterns need to be found in the developing countries who are experiencing national dietary structure change, especially China, which will have co-benefits for healthcare, environmental, and economic sustainability [2]. There is a positive correlation between an increase in education and a balanced diet [2]. Two studies showed that communal healthy lifestyle and healthy diet education is effective for national health promotion in preventing stroke [15,16]. Meanwhile, information sharing is also key to effective interaction and co-creation between doctors and patients [17]. Fortunately, in the modern age, the rapid development of the internet has created a global knowledge searching, learning, and sharing platform. So, how to realize healthy diet education and knowledge popularization through the internet is an interesting question in healthcare. However, the healthy diet information available on the internet is growing rapidly and is distributed on multiple sources, which puts pressure on information searchers. It is time-consuming for users to learn about healthy diet through internet data: they need to search data on multiple platforms, choose and integrate information, and then understand what they have learned. The purpose of this paper is to provide people with healthy diet knowledge of Chinese diet culture, traditional Chinese medicine (TCM), Western medicine, and nutrition through the

internet, based on new a technology called the knowledge graph. This paper contributes to rebuilding people's healthy dietary structure and promoting healthcare and national sustainability development through knowledge popularization.

The Shanghai declaration on promoting health in the 2030 Agenda for Sustainable Development was put forwarded to promote health through action on all the Sustainable Development Goals (SDGs) [18]. The declaration prioritizes good governance, local action through cities and communities, and people's empowerment by promoting health literacy. It also places a high priority on innovation and development to support people's enjoyment of a healthy life and gives precedence to the health of the most vulnerable. To achieve these goals, some political choices for health were put forward, including "increase citizens' control of their own health and its determinants, through harnessing the potential of digital technology" and "consider the growing importance and value of traditional medicine, which could contribute to improved health outcomes, including those in the SDGs". Guided by the Shanghai declaration, this work added TCM culture in the knowledge graph to increase people's dietary knowledge. The traditional dietary culture in China mainly comes from the concept of health preservation in TCM, which has a long history that can be traced back to 3500 BC, the time of the Shang Dynasty [19]. Diet therapy is a method of treating and preventing diseases through eating effective food, which is an important part of TCM health preservation. In the modern age, the combination of TCM and modern medical therapy offers great possibilities for the development of new methods of disease treatment [20,21].

The theory of yin and yang in TCM should be introduced. From the perspective of TCM, yin and yang are opposites, representing cold and hot, respectively. All personal physiques, diseases, foods, and medicines can be divided into two categories: cold and hot [22]. Although personal physique does not cause disease, it can make people relatively susceptible to certain diseases. So, food therapy in TCM advocates that food attributes should be used to fight against disease [22]. In recent years, two studies have speculated that the cold and hot of TCM are related to the concept of oxidation and antioxidation in modern Western medicine [23,24]. Therefore, from that point of view, the role of TCM can be seen as maintaining and rebuilding the balance between cold (yin) and hot (yang) in the human body. Ordinarily, doctors determine whether a person's body is cold or hot by looking, listening, asking questions, and palpating. Observing the tongue is another important way to make a diagnosis [22,25,26]. Health-preserving recipes are also included in TCM. For example, ginger tea can help to relieve the symptoms of a cold, which comes from TCM and was recorded in the General Records of Holy Universal Relief (Song Dynasty) [19].

This paper establishes a knowledge management model that can semi-automatically extract data from multiple sources in a network and integrate them into knowledge graph so that unified management and query can be provided based on the knowledge. The knowledge graph in this paper contains five main concepts: food material, dish, symptom, crowd, and nutritional element, which are connected to each other through relationships. In addition, there is some knowledge of TCM in this knowledge graph, including the health-preserving recipes and the cold and hot attributes of food. Finally, based on the knowledge graph, a semantic retrieval application is implemented, which is aimed at helping users who do not have a background in related fields to efficiently and comprehensively retrieve and analyze healthy diet knowledge. Meanwhile, the system can automatically classify users' physique types based on their tongue phase classification [12] and provide personalized food recommendations. In the evaluation, 90 experimenters used the prototype system for 30 days, and their feedback on a questionnaire was analyzed. The preliminary results showed that they could retrieve and learn healthy eating knowledge more quickly and comprehensively, and reduce their consumption of junk food, proving that this work had a positive effect on users' searching and learning.

The contributions of this paper are as follows: First of all, the knowledge management model designed in this work can integrate scattered data and provide uniform storage, management, and query services based on the structured data in the knowledge graph, which can reduce the time cost for users in retrieving and learning comprehensive knowledge. Second, this work explores

the relationships between multiple concepts. The relationship networks can provide users with health knowledge from more dimensions. Finally, knowledge of Chinese diet culture and TCM are added to the knowledge graph to provide diet guidance based on TCM theory. By providing people with access to integrated and structured healthy diet knowledge based on new technology, this research contributes to national healthy eating knowledge education and promotion. Against the background of the dramatic change of national dietary structure, the significance of this work is in reminding people of their traditional diet and reducing diets high in salt and fat, transforming them from passive treatment to active disease prevention. It provides the benefit of reducing the negative influence of unhealthy diet on healthcare, the economy, and the environment, and promotes healthcare and national sustainable development.

2. State of the Art

In recent years, many researches have focused on health knowledge popularization and behavior promotion through the internet and emerging technologies. One work developed a mobile app named DietApp, which can provide advice about obtaining a healthy diet according to age, clinical history, and physical condition [27]. It has been developed for iOS and Android systems, and a survey comprising seven simple questions enabled the app to be evaluated on a user level by considering aspects such as its usefulness and ease of use. One work presented SousChef, a mobile meal recommender system to assist older adults by providing a nutrition companion to guide them in making wise decisions regarding food management and healthy eating habits [28]. The personalized nutritional plans provided by the system according to the information provided by the user, namely, their personal preferences, activity level, and anthropometric measurements. Another system called DIETOS was projected to provide users with a health profile and individual nutritional recommendations [29]. Health profiling was based on user answers to dynamic real-time medical questionnaires. Furthermore, DIETOS contains catalogs of typical foods from Calabria, a Southern Italian region. The healthy diet systems can also include gamification, social networks, and expert or teacher intervention mechanisms in their design to keep users on healthy diet. One work was a mobile platform system called HAPPY ME, which involves parents and teachers in monitoring and providing an encouraging environment for participating children [30]. The platform serves as a data reservoir for teachers, enabling them to track students' eating behaviors, screen time, and anthropometric parameters. Another work provided specific tailored activities designed by experts to meet users' abilities [31]. The plan can be modified and reassigned again. The system provides timely notification to trigger the user. The user can decide the amount of activity to follow, or skip the plan. The application provides a social feature where users can add/interact with friends in the activity.

These studies focused on healthy diet recommendation function and intervention design for healthy behavior promotion, not the data schema design or health knowledge management and representation. People still lack comprehensive knowledge about healthy diet, especially the relationships between food and other concepts. For example, users do not know what kind of food they should choose or avoid when there is some discomfort in their body. They are also not clear on what kinds of food suits their physique, occupation, and living conditions. Meanwhile, information and knowledge from multiple sources should be integrated to solve users' questions, such as: Is celery beneficial for hypertensive patients? What fruits are good for pregnant women? What kind of food is suitable for summer and can relieve summer heat? This type of knowledge involves more than two fields, such as nutrition, healthcare, traditional Chinese medicine (TCM), and so on, as well as many aspects such as food types, user groups, season, location, and so on, which are always distributed on multiple data sources. In the big data age, in order to find all answers to one question, users often need to change search terms and search on different platforms, which costs a lot of energy and time.

There are some knowledge bases and ontologies in medical and food fields that can provide users with complex knowledge, such as the Unified Medical Language System (UMLS) [32], clinical ontology systems such as Systematized Nomenclature of Medicine–Clinical Terms (SNOMED-CT) [33], and drug

databases such as DrugBank [34]. However, these knowledge bases are professional medical terminology databases, their main objective being to provide medical workers with knowledge and promote the standardization and interoperability of biomedical information systems and services [35]. So, it is hard for non-professional people to use them for learning. There are also user-oriented knowledge graphs, which are used to recommend and retrieve recipes for users. One work presented an architecture built upon semantic technologies for supporting the monitoring of people's behaviors and for persuading them to follow healthy lifestyles [36]. The work modeled all relevant information and realized reasoning activities by combining user-generated data and domain knowledge based on ontology. Another work integrated multiple ontologies of food, health, culture, religion, nutrition, and other fields to build a data base and achieve personalized food retrieval [37]. Finally, Reference [38] designed an ontology-driven mobile safe food consumption system (FoodWiki). The system is designed to suggest the selected food's appropriateness to food consumers according to their health conditions or intolerance. Its knowledge base contains 4 main classes, 58 sub-classes, 15 object type properties, 17 sub-object type properties, 12 data type properties, 1530 individuals with annotation type properties, and 210 semantic rules. Its root class "Thing" contains four main classes: "Diseases", "Person", "Ingredients", and "Product".

The differences and advantages between this paper and the previous works are explained here. Firstly, this work is not based on ontology fusion or data base integration, but places emphasis on extracting and integrating knowledge from all kinds of internet data sources, which includes structured data, semi-structured data, and unstructured data. In this work, half of the entities and relationships in the knowledge graph were extracted from natural language sentences. In addition, most knowledge bases are based on English or other non-Chinese language and diet culture. This work added Chinese diet culture and TCM theory to the knowledge graph, which aims at reminding and educating Chinese people with these traditional balanced dietary habits, and can be seen as an assistance tool to control the dramatic rise of high-fat diet consumption in the population.

3. Materials and Methods

This section mainly introduces the main methods used in building the knowledge graph and retrieval application. First, the data schema (the structure of the knowledge graph) is introduced. Then, the process of constructing the knowledge graph from network data as well as the mechanism of semantic retrieval and food recommendation application are introduced.

3.1. Background of Healthy Diet Awareness, Knowledge, and Behavior of Chinese People

At the beginning of the study, this work conducted a questionnaire survey on the internet in order to acquire the dietary health status of the Chinese population, which informed the knowledge map construction. Twenty questions were designed, including those addressing dietary health awareness, knowledge, and behaviors of Chinese people, as well as their awareness and treatment history and the influence of TCM. In total, 1059 responses were acquired, and the respondents covered 31 provincial-level administrative regions of China and ranged from 15 to 65 years old.

Some conclusions were made based on the analysis of results:

1. Chinese people have a decent awareness of dietary health. The results of the questionnaire showed that 47.4% of the respondents considered health issues almost every time they ate food, and 50.14% of them sometimes considered health issues; 92.45% actively learned about dietary health knowledge; 79.41% desired to get healthy dietary suggestions from experts; but 72.14% were unable to achieve this because of economic constraints.
2. TCM has a deep influence on Chinese people: 81.02% of the respondents trusted in the theories of TCM; 76.2% received TCM treatments; and 73.28% said that the treatments improved their health. Particularly, 72.8% said that TCM and Chinese culture affected their diet.

3. Although Chinese people have a decent awareness of dietary health, most of them only have a one-sided understanding of dietary health knowledge: 79.13% of respondents only knew simple common sense of dietary health; only 39.06% could guarantee the balance of nutrition; and 34.33% knew how to do diet modification against changes of weather, circumstances, and uncomfortable symptoms.

This work also focused on the obstacles for people to obtain the knowledge needed for a healthy diet and the reasons why people cannot stick to a healthy diet. As shown in Figure 1, the three biggest obstacles that people encountered in the process of acquiring relevant knowledge are: busy with work, do not want to spend time and energy to learn (59.11%); do not know how and where to acquire knowledge (51.56%); and cannot persist with healthy diet, so do not want to learn the knowledge (42.87%). There were three main reasons why people cannot stick to a healthy diet: the attraction of junk food (60.62%), the stress of working in modern society (59.77%), and a lack of knowledge about how to choose food (47.21%).

The results of the questionnaire survey provided guidance for the knowledge graph design. In the first place, people lack knowledge of diet and health (e.g., they do not know how to balance nutritional elements or how to adjust their diet when they are unwell). So, a food–symptom knowledge graph model that includes multiple concepts of food, symptoms, crowd group, and nutritional elements should be designed to provide users with multi-concept semantic queries. Because TCM has a unique influence on the Chinese healthy diet, the knowledge graph should contain knowledge from TCM and Chinese culture. Besides, in the modern age, many people have no time to pay attention to a healthy diet. Meanwhile, retrieving and choosing among the massive amount of information on the internet wastes their valuable time. The knowledge graph designed in this paper integrates data from different data sources and provides users with unified management and retrieval, which maximizes the efficiency of searching for knowledge.

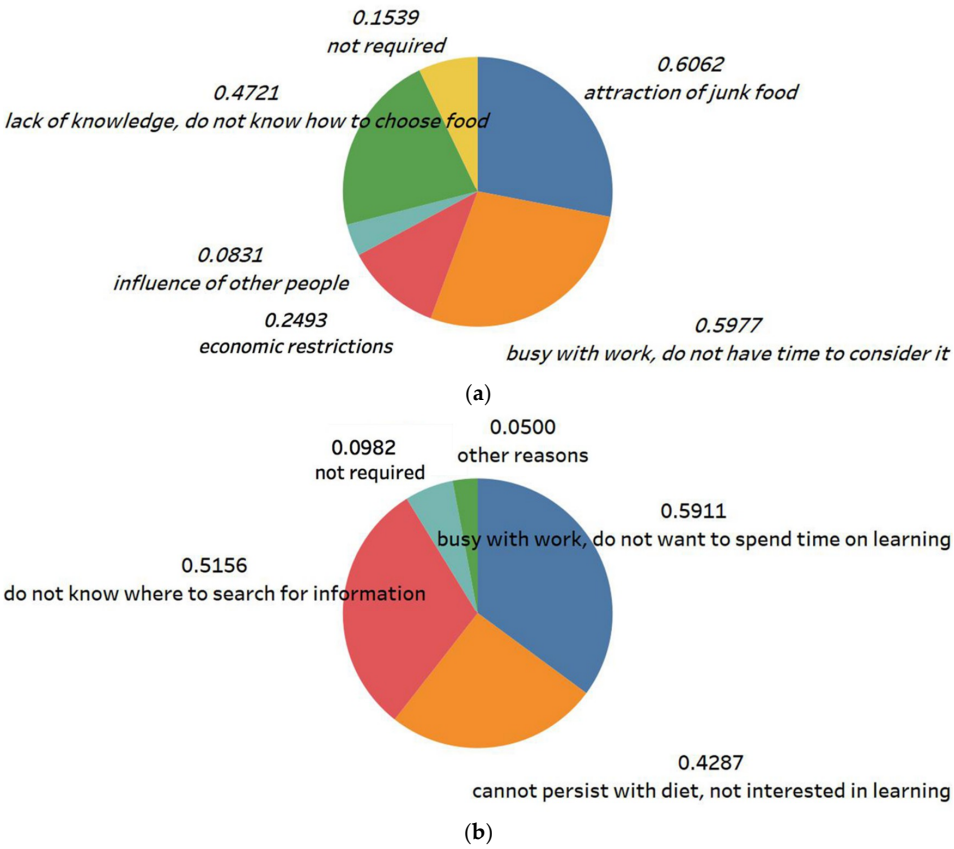

Figure 1. Two questions in the survey: (**a**) Reasons for unhealthy diet in China and (**b**) Obstructions to learning healthy diet knowledge.

3.2. Data Schema Design

A knowledge graph is a structured knowledge base composed of triples of "entity–relationship–entity", which can describe entities and relationships in the real world [39]. Every entity is an instance of one concept (e.g., "headache" can be seen as an entity of the concept "symptom"). In this study, some important concepts and relationships were defined. There were five important concepts in this work with a close connection to the topic of food and health: food material, dish, nutritional element, symptom, and crowd. "Food material" can be seen as the raw materials for making dishes, such as chicken, carrot, and cucumber, while "dish" refers to combined food materials, such as Kung Pao chicken, beef soup, and fried tomato and egg. "Nutritional element" contains carbohydrate, calcium, and so on. "Symptom" refers to common discomforts, such as dizziness, stomach pain, etc. The symptoms in this paper also include some common diseases, such as hypertension. "Crowd" represents a group of people who are susceptible to the same diseases and symptoms, which can be classified according to state, age, and the physical fitness of TCM, such as pregnant, elderly, yang deficiency, and so on. Besides these concepts, many relationships were also defined to link them. The data schema of the knowledge graph can be seen in Figure 2.

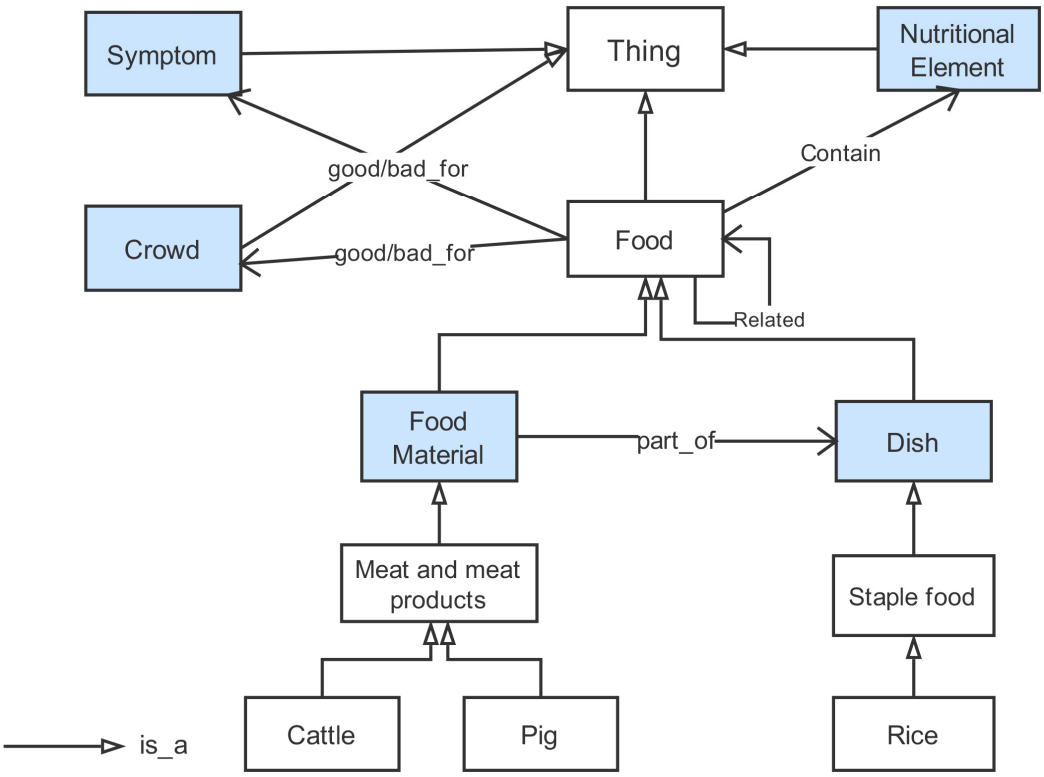

Figure 2. Data schema of food knowledge graph.

Figure 2 shows that the concept was designed as a hierarchical structure and between two levels. Concepts were linked by a kind of inheritance relationship—"is_a", the advantage of which is that the descendant concept can inherit all the relationships and attributes of the parent concept, facilitating data maintenance and reasoning. In order to provide users with more specific and abundant knowledge, the concepts of "food material" and "dish" were continued to classify to the sub-concepts. For the food material, this paper used the food classification system in China Food Composition [40], which is one of the most authoritative food composition statistics book in China. The classification of dishes includes staple foods, dishes, drinks, and snacks according to Chinese people's eating habits.

In this work, every concept had many attributes defined, for example, the "food material" concept had attributes such as food name, alias, profile, taste, efficacy, and so on. "Dish" had name, production

method, and so on. Some of the attributes were TCM knowledge. Besides, the knowledge graph can be expanded, which means more concepts, relationships, and attributes can be added and maintained in the future. For example, the concepts of "geographical location" and "weather" can also be associated with "symptom" and "food material".

The structure of data schema in this work is based on an ontology model. An ontology is an explicit representation of a conceptualization of a domain. This work implements ontology in the Web Ontology Language (OWL), which is a formal language based on description logics and offers a formal, model-theoretic semantics [41]. For the design of data schema, this paper referred to Reference [38], who designed an ontology-driven mobile safe food consumption system and its the root class "Thing" contains four main classes: "Diseases", "Person", "Ingredients", and "Product". According to the Chinese dietary habits, TCM, and China Food Composition [40], this paper designed concepts, relationships, and attributes to suit own demand based on the semantics of OWL. An ontology development platform called Protégé was used to build the ontology in this work [42].

3.3. Knowledge Graph Construction

The previous section introduced the data schema defined in this paper. This section will briefly describe the process of knowledge graph construction according to the defined data schema, that is, how to extract entities, relationships, and attribute values from network data source and map them to the data schema, and how to merge data that represent the same entity before importing them into the database.

Figure 3 shows the process of building the knowledge graph in a continuously expanded and updated way. First, in the data acquisition step, the text data were obtained from the network data sources. This work acquired data from four resources: China Food Composition [40] and three Chinese health websites, which contain a great deal of information about traditional Chinese food and related symptoms and diseases. Then, Chinese natural language processing (NLP) technology and the conditional random field (CRF) algorithm were used to extract character strings of entities from the obtained text data. Machine learning text classification techniques were then used to classify the extracted entities into the corresponding concepts of the defined data schema. This work also used machine learning algorithms to extract and classify relationships between two entities. Four algorithms were used to compare with the precision and recall scores of classification, including support vector machine (SVM), naive Bayes (NB), long short-term memory (LSTM), and K nearest neighbor (KNN). Finally, data fusion was done before these new entities and relationships were added to the knowledge base.

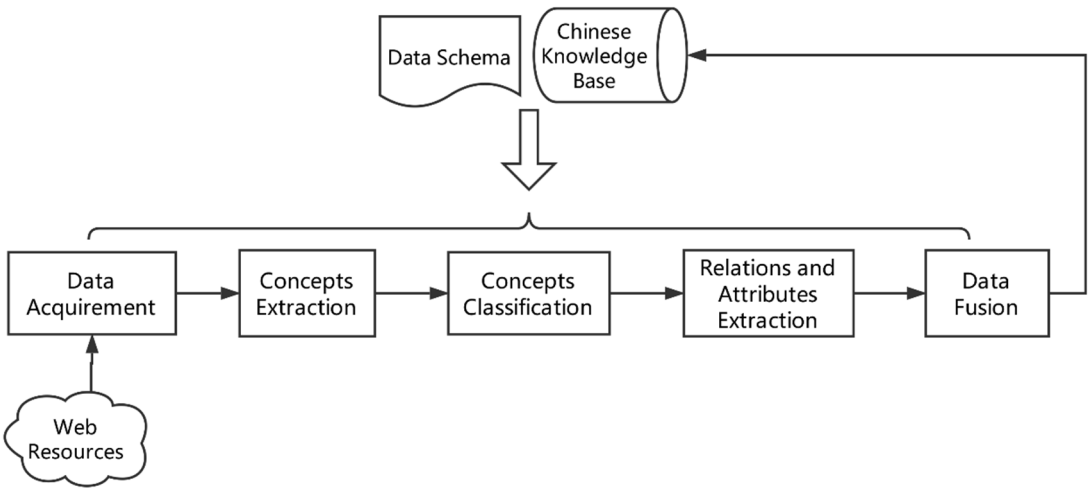

Figure 3. Workflow of knowledge graph construction.

In the data fusion step, because the entities were extracted from four different data sources, the same entities should be merged before mapping to the concepts. Even if their strings are the same, they may be different entities. For example, "apple" may represent a kind of food that needs to be extracted, or may represent Apple Inc. Similarly, entities with different strings may be the same—for example, many foods have aliases. All the entities in the knowledge graph maintain the name, alias, and links to other similar entities, so that users can perform semantic retrieval based on them. In this paper, text similarity calculation was automatically implemented by the machine learning algorithm to achieve fusion of the same entities, and some manual screening and proofreading were also done to ensure quality. Finally, new entities and relationships after data fusion could be added to the knowledge graph.

Table 1 shows some examples of concept and relationship extraction. The first column represents descriptions of food topics in data sources, and the second column shows the entities extracted from text data and mapped to the corresponding concept in the data schema. For example, the two entities "honey" and "constipation" were extracted from the text data "Honey has a regulating effect on gastrointestinal function, which makes gastric acid secretion normal, enhances intestinal peristalsis, and prevents constipation," and then they were linked to the concepts in the data schema: "honey" was linked to the "honeys" concept (subconcept of "food material") and "constipation" was linked to the "symptom" concept. The third column shows the relationships extracted between two entities and the triple formed by two entities and their relationship. The triple in this instance is "honey–good_for–constipation". A triple can represent a relationship between a pair of concepts, and the knowledge graph can be seen as a network of triples.

Table 1. Examples of concepts and relations extraction in knowledge graph construction.

Web Resources	Concepts Extraction	Relations Extracted
"Honey has a regulating effect on gastrointestinal function, which makes gastric acid secretion normal, enhances intestinal peristalsis, and prevents constipation".	(honey -> honey/sugars_preserves_and_honeys/food_material/food) (constipation -> symptom)	(honey–good_for–constipation)
"Celery is the first choice for adjuvant treatment of hypertension and its complications. It also has an adjuvant treatment for patients with vascular sclerosis and neurasthenia".	(celery -> stem_leafy_and_flowering_vegetables/vegetables_and_vegetable_products/food_material/food) (hypertension -> symptom) (vascular_sclerosis -> symptom) (neurasthenia -> symptom)	(celery–good_for–hypertension) (celery–good_for–vascular_sclerosis) (celery–good_for–neurasthenia)
"Pork liver contains a lot of vitamin A and protein, which can nourish the liver. It has good curative effect on vision loss and night blindness. However, pig liver cholesterol is high, and people with hypertension and obesity should eat less".	(pork_liver -> meat_and_meat_products/food_material/food) (vitamin_A -> nutritional_element) (protein -> nutrient_element) (cholesterol -> nutrient_element) (vision_loss -> symptom) (night_blindness -> symptom) (hypertension -> symptom) (obesity -> crowd)	(pork_liver–contain–vitamin_A) (pork_liver–contain–protein) (pork_liver–contain–cholesterol) (pork_liver–good_for–vision_loss) (pork_liver–good_for–night_blindness) (pork_liver–bad_for–hypertension) (pork_liver–bad_for–obesity)

The detailed introduction of bidirectional LSTM (BiLSTM) for relationship classification in this work can be seen in Figure 4. Recurrent neural networks (RNNs) and LSTM are widely used in natural language processing (NLP) problems, because it is suitable for time series data, while each sentence in natural language can be seen as a sequence that is comprised of a combination of characters. For example, the entities "celery" and "hypertension" were extracted from "Celery is the first choice for adjuvant treatment of hypertension and its complications". Now, the relationships (celery is good for hypertension or bad for hypertension) between them can be classified based on BiLSTM. In Figure 4, C1–Cn (Chinese character), h0, S (sentence), and R (output) are vectors. The input of the classifier is the random initialization vectors of C1–Cn and h0 and the output is O (a two-dimensional vector;

O0 is the probability of the relationship of "good at" and O1 is the probability of "bad at"). The neural network can find the best parameter (w) combination through the training process, and then classifies.

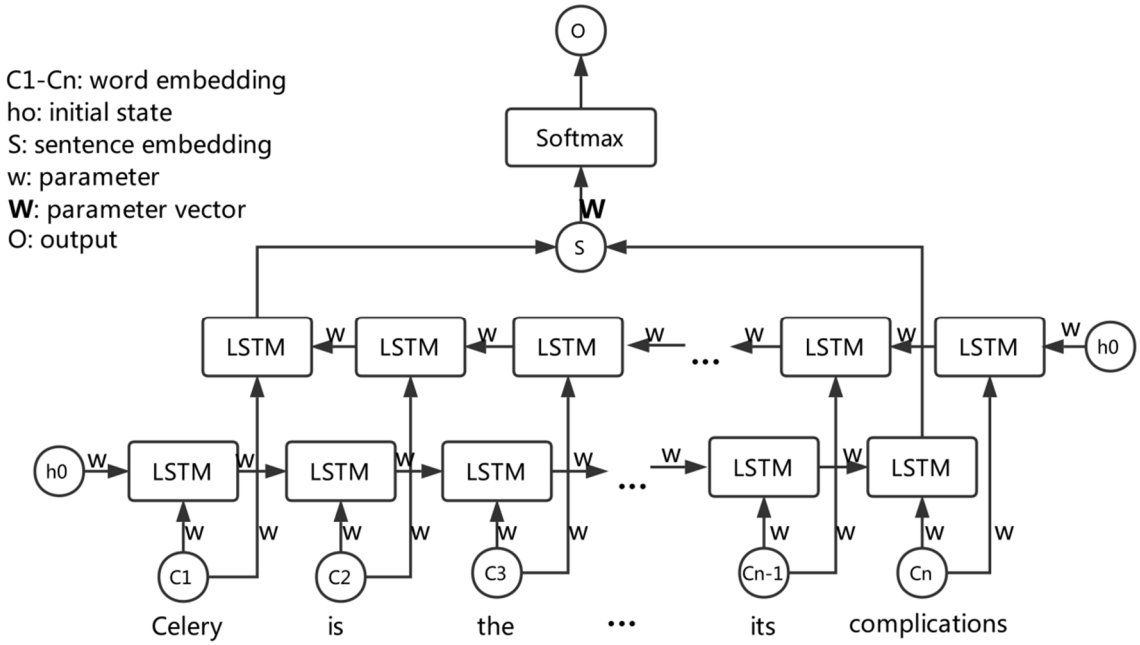

Figure 4. Structure of bidirectional long short-term memory (BiLSTM) in processing text classification.

Although RNNs are capable of capturing long-distance dependencies, they fail in practice due to the vanishing gradient problem [43]. LSTMs [44] are a variant of RNNs designed to cope with these vanishing gradient problems. Basically, an LSTM unit is composed of three multiplicative gates that control the proportions of information to forget and to pass on to the next time step. Figure 5 gives the basic structure of an LSTM unit. An LSTM memory cell is implemented as follows. In the formula, σ is the logistic sigmoid function, and i, f, o, and c are the input gate, forget gate, output gate, and cell vectors. The weight matrix subscripts have the meaning as the name suggests. For example, W_{hi} is the hidden-input gate matrix, W_{xo} is the input–output gate matrix, etc.:

$$i_t = \sigma(W_{xi}x_t + W_{hi}h_{t-1} + W_{ci}c_{t-1} + b_i), \tag{1}$$

$$f_t = \sigma\left(W_{xf}x_t + W_{hf}h_{t-1} + W_{cf}c_{t-1} + b_f\right), \tag{2}$$

$$c_t = f_t c_{t-1} + i_t \tan h(W_{xc}x_t + W_{hc}h_{t-1} + b_c), \tag{3}$$

$$o_t = \sigma(W_{xo}x_t + W_{ho}h_{t-1} + W_{co}c_t + b_o, \tag{4}$$

$$h_t = o_t \tan h(c_t). \tag{5}$$

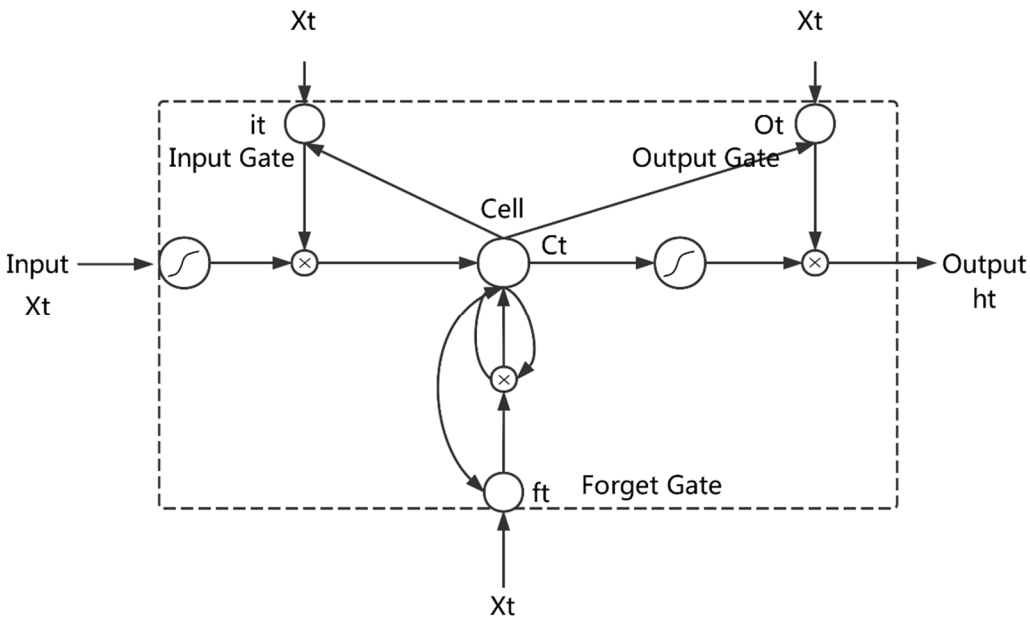

Figure 5. Structure of the LSTM core.

3.4. Retrieval Based on Knowledge Graph

This section will introduce the application based on the knowledge graph, which was designed to facilitate the retrieval and analysis of information about food nutrition, food efficacy, and relationships between food, symptoms, and crowds. The system can provide users with knowledge retrieval, analysis, and food recommendation functions based on the knowledge graph.

The most important function of this system is semantic retrieval, which aims to solve the user's questions from multiple dimensions. The user can search for entities of five concepts: food material, dish, nutritional element, symptom, and crowd. The system can return not only corresponding entity attribute values, but also other entities related to them in the knowledge graph. By using this multiconcept semantic retrieval system, users no longer need to spend time and energy retrieving multiple concepts from different data sources and combining information in their minds. One instance of the retrieval function is shown in Figure 6: the user searched "hypertension", and the system returned all entities of the five concepts related to hypertension based on the knowledge graph (this instance shows the page of related food materials). All entities of foods related to hypertension were shown in the list and their relationships with hypertension, including "good_for" and "bad_for", were also shown to help users filter the information.

In addition, another function of this system is to make personal food recommendations for users. When first using this system, users fill in some questionnaires and upload photos of their tongue [12]. Based on the questionnaires, the system can consider the user's conditions and make personal recommendations. The details of the questionnaires are as follows:

1. Basic information questionnaire, including gender, age, height, weight, job category and lifestyle, chronic case history, etc.
2. Physical condition questionnaire, including questions about whether users have symptoms, which aims to analyze their physical condition categories based on yin and yang theory in TCM.
3. Tongue photo, which is also for analysis of the user's physical condition.
4. Recent discomfort symptoms, such as eye fatigue, colds, etc.
5. Dietary preferences: foods and tastes that the user likes or dislikes.
6. Date and location.

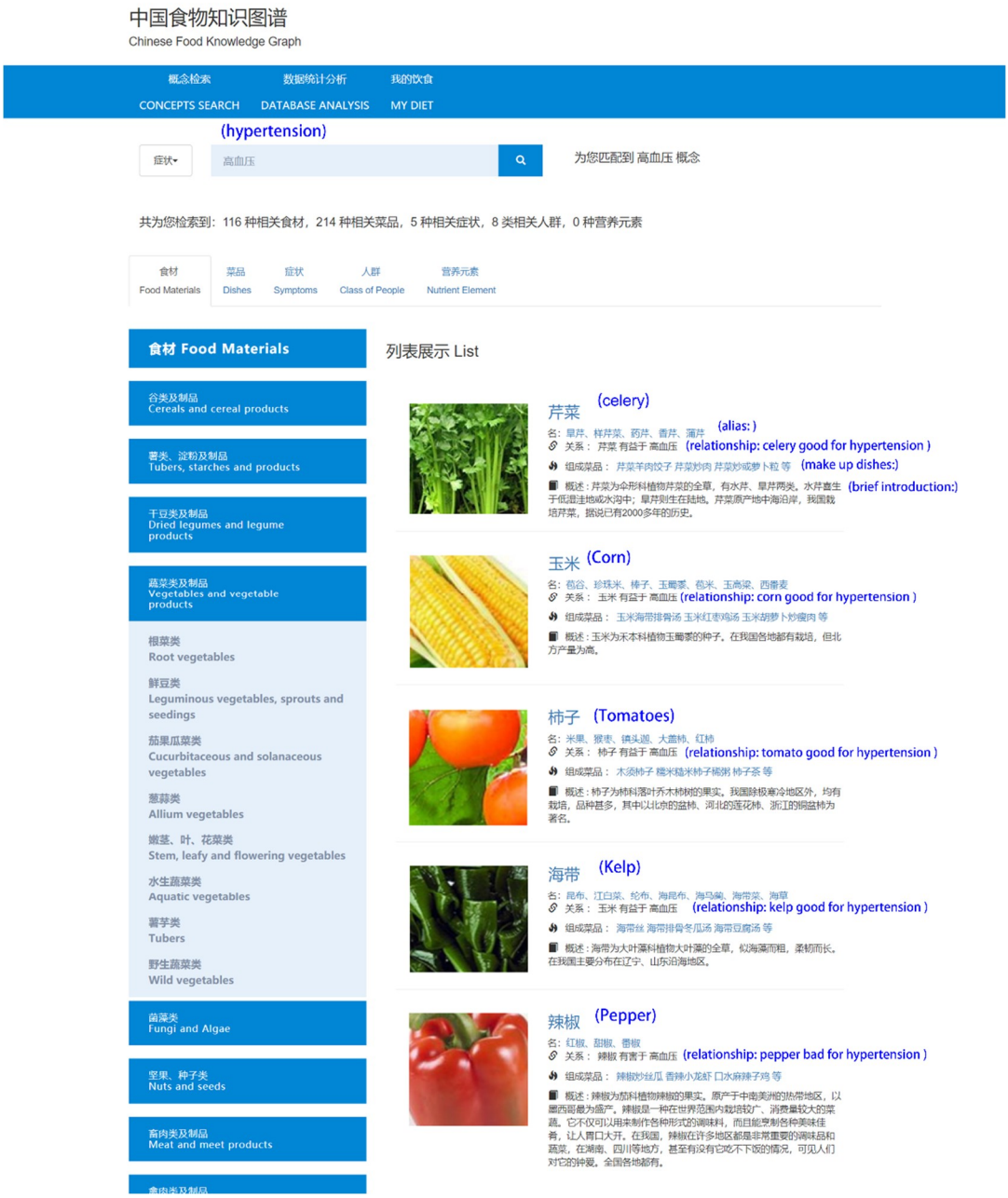

Figure 6. Interface of sematic retrieval system.

As shown in Figure 7, the system extracts information that is helpful to make personal recommendations. Specifically, it includes foods the user prefers (including names and categories of food or dishes), the province where the user is located, the current date, the user's physical condition, the living state (including work, whether the person is pregnant, etc.), basic information (including age, gender, weight, height), the disease and discomfort, and so on. After that, the information is linked to corresponding entities in the knowledge graph based on some matching rules. Finally, the related food in the knowledge graph can be returned by the system.

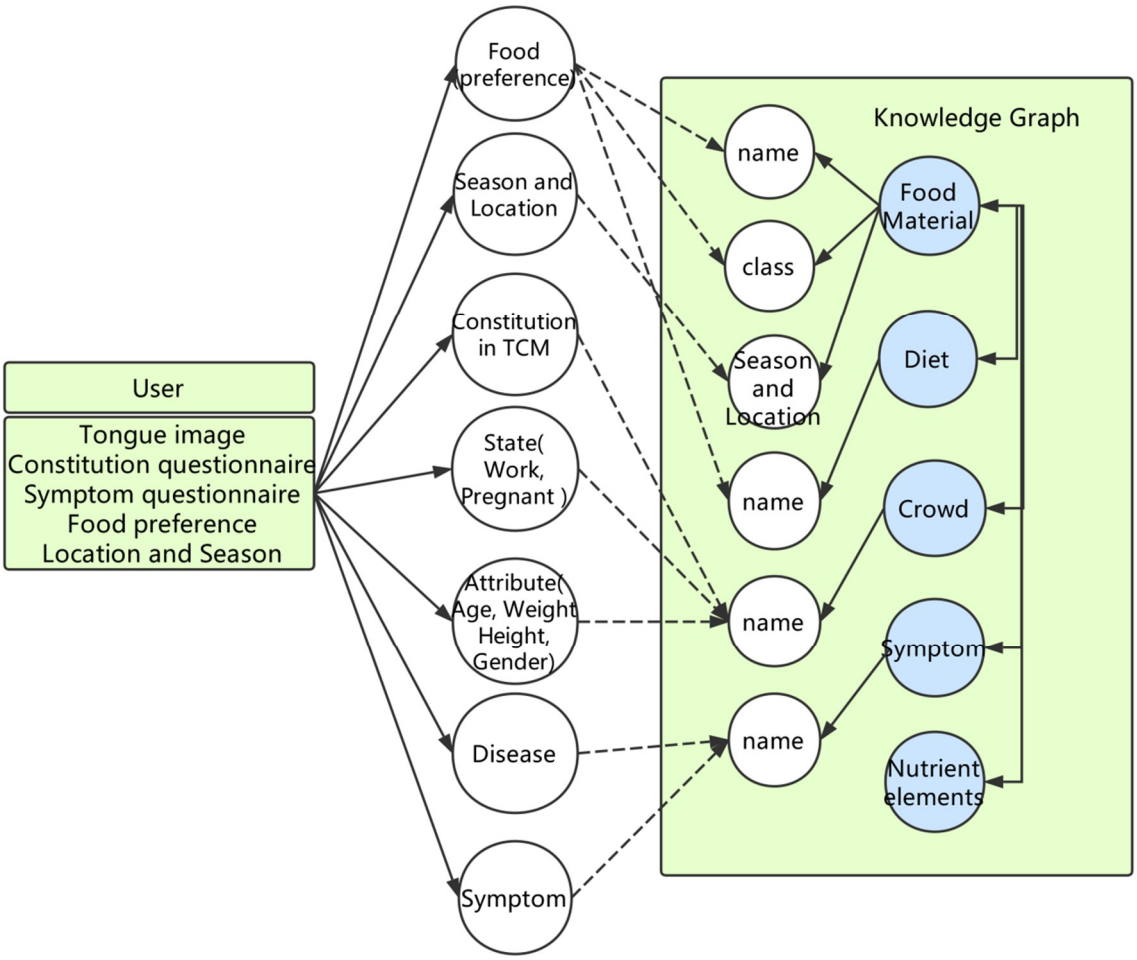

Figure 7. Matching model between user information and knowledge graph in food recommendation.

4. Results

This paper first evaluated the quality of the knowledge graph based on the precision, recall, and F1-measure of automatic entity and relationship extraction. Then, through the user evaluation questionnaire, this paper analyzed whether the system based on the knowledge graph can provide users with healthy diet information retrieval and help them search for and learn about diet and health more efficiently and comprehensively.

4.1. Evaluation of Knowledge Graph

The precision and recall values of automatic concept extraction and relationship recognition in the knowledge graph can be seen in Table 2. In the evaluation of concept extraction, 5000 sentences in the data sources were randomly selected. Then, the entities of related concepts in these sentences were tagged manually by a TCM specialist. The conditional random field (CRF) algorithm was used in this work, where 4000 sentences were used for training, and 1000 for testing. After that, the results of the method's application to 1000 sentences were compared with those manually tagged by a specialist. Finally, the precision, recall, and F1 values were calculated. For entities of the "symptom" concept, the F1 value was 88.89%, and for "crowd" it was 88.24%.

For the evaluation of relationship recognition, this paper mainly evaluated the most important relationships, including "Food material–good_for–Crowd", "Food material–bad_for–Crowd", "Food material–good_for–Symptom", "Food material–bad_for–Symptom", "Food material–same–Food material", and "Food material–related–Food material". The relationship recognition can be divided into two tasks, one is to classify the "good_for" or "bad_for" relationships between "food material"

and "symptom" or "crowd. Another is to classify "same", "related", or "different" relationships between two "food material" entities. The former also used the 5000 sentences, in which the entities and relationships between entities were tagged manually. Four thousand sentences were used for training the machine classifier and 1000 for testing. In this task, algorithms including support vector machine (SVM), naive Bayes (NB), bidirectional long short-term memory (BiLSTM), and K nearest neighbor (KNN) were used as the classifier, and their precision and recall scores were compared to each other. For the latter, this work randomly selected 500 food material entity pairs from the data set and manually labeled them (same entity, related entity, or different entity). Then, some features of the food material were selected to be the input of the classifier, such as name, alias, taste, category, and description. The results of three algorithms (i.e., SVM, NB, KNN) were also compared. This task did not use BiLSTM because it has a higher time complexity than other algorithms and needs a long training time, and is more suitable for large-scale data.

It can be seen from Table 2 that though the knowledge graph was semi-automatically constructed by automated machine learning algorithms, the precision and recall of the best algorithm results for each task of concept extraction and relationship recognition were all above 85%. Among them, the scores for concept extraction were 88.89% and 88.24%. The best result (SVM and BiLSTM) of "good_for" and "bad_for" relationship classification was 99%, and the best result (SVM) of "related" relationship and "same" relationship was 86%. This verifies that the knowledge graph had high quality. SVM is always considered as a good method in text classification, and had the highest score both in "good_for" or "bad_for" relationship classification and in "related" or "same" relationship classification. Because it can compress a big data set to a support vector set and learns the classification decision function, it solves the problem of the need for a large number of samples. It only needs to translate a certain amount of text data into vectorized data, which improves the accuracy of classification. The BiLSTM also had a good performance for processing text data, because it is suitable for time series data and each sentence in natural language can be seen as a sequence that is a combination of characters. In addition, the LSTM model solves the vanishing gradient problem in the traditional RNN model, which has made it a widely used model in natural language processing (NLP). However, LSTM has a higher time complexity than other traditional machine learning algorithms and it is more suitable for large-scale data. After comparing with the results of these algorithms, this work finally chose SVM to do relationship recognition task.

Table 2. Evaluation of knowledge graph (precision, recall, and F1-measure of concept extraction and relationship recognition). CRF: conditional random field; KNN: K nearest neighbor; LSTM: long short-term memory; NB: naïve Bayes; SVM: support vector machine.

Operation	Concept or Property	Algorithm	Precision	Recall	F1-Measure
Concept Extraction	Symptom	CRF	92.00%	85.98%	88.89%
	Crowd	CRF	88.66%	85.03%	88.24%
Relationship Recognition	good_for/bad_for	SVM	99.00%	99.00%	99.00%
		NB	91.00%	87.00%	88.00%
		LSTM	99.00%	99.00%	99.00%
		KNN	96.00%	96.00%	96.00%
	related/same/different	NB	91.00%	90.00%	86.00%
		KNN	72.00%	81.00%	76.00%
		SVM	92.00%	90.00%	86.00%

4.2. System Evaluation Questionnaire

In order to answer whether the system can help users retrieve and learn information about healthy diet more quickly, efficiently, and comprehensively, this paper selected 90 subjects in the experiment to use the system for 30 days and acquired their retrieval and learning experience, their evaluations of the system, and their changes before and after the experiment. Before the experiment, the participants

were asked to fill out a questionnaire about their background, dietary health awareness, knowledge, behaviors, and attitudes about and understanding of TCM. During the 30 days of the experiment, they used the system for information retrieval and food recommendations to obtain dietary knowledge. After the experiment, a questionnaire survey and further interviews were designed for all participants. The questions can be seen in Table 3, questions 1–7 were designed to capture the impact of the system on users' retrieval and learning, which was the most important part of this work, including whether they acquired new knowledge, the efficiency and quality of retrieving and learning knowledge, etc. Questions 8–12 were designed to capture the changes of participants' dietary behavior. Questions 13–16 represented their overall evaluation of the system. Among these, Questions 6, 7, 12, 15, and 16 were subjective questions, and the others were objective questions. For objective questions, answers could be chosen on a scale of −1, −0.5, 0, 0.5, and 1, with positive points representing a positive attitude and negative points a negative attitude. The greater the absolute value, the stronger the attitude.

Table 3. Experimental questionnaire survey.

Type of Questions	Questions
Knowledge Promotion	1. Did you learn new knowledge about healthy diet by using this system? 2. Compared with your previous learning approaches, did the system provide you with richer and broader healthy diet knowledge? 3. Compared with your previous learning approaches, did the system improve your retrieval and learning efficiency? 4. Compared with your previous learning approaches, did you have more interest in retrieving and learning healthy diet knowledge? 5. Did the functions and platform display of the system help you retrieve and understand knowledge? 6. What other information and knowledge do you think can be added to the knowledge base? 7. What advantages and disadvantages does the system have in searching and learning?
Behavior Promotion	8. Compared with before, can you overcome certain junk food temptations? 9. Compared with before, do you have the ability to choose healthier foods? 10. Do you think your diet has become healthier than before? 11. Are you more likely to stick to healthy eating habits than before? 12. What are the changes in your eating or health behaviors?
Overview of the System	13. Would you like to continue to use the system? 14. Is the function of this system advanced and reasonable? 15. What are the advantages or disadvantages of this system? 16. Do you have any comments or suggestions on this system?

The average scores of the subjects on the objective questions are shown in Figure 8. The score values of all questions in all dimensions were positive, which indicated that the subjects had positive attitudes about the whole work. In addition, the participants were classified based on their healthy diet awareness according to the background survey: strong health awareness (at almost every meal they thought about dietary health), general health awareness (sometimes thought about dietary health), and weak health awareness (almost never thought about dietary health). There was little difference in the scores of different groups. Relatively, participants with strong health awareness had higher evaluation scores, which may be because they used the system more frequently and learned more knowledge and persisted with a healthy diet for a longer time. Therefore, it is very important to cultivate people's health awareness. Besides, it was also shown that participants who trusted TCM had better evaluations of this system.

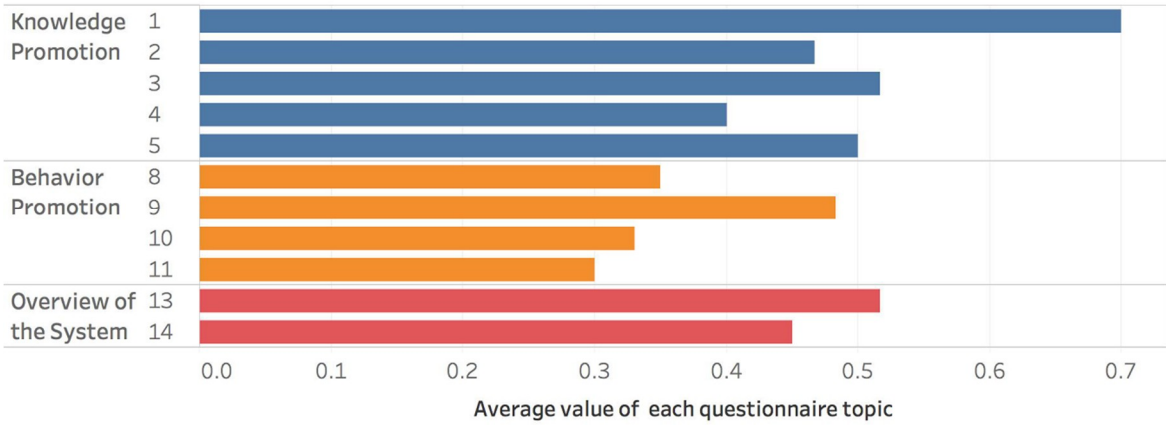

Figure 8. Average value of evaluation of each questionnaire topic.

For knowledge promotion (Questions 1–7), all the questions got a more positive answer from subjects, especially Question 1. For Question 2, two thirds of the participants gave a very positive answer, while others were uncertain about whether the diet knowledge in this work is richer and broader than other platforms. Questions 3 and 5 showed that the system improved subjects' retrieval and learning efficiency and knowledge scope by integrating data from multiple data sources and semantic retrieval. In addition, by using the system, the subjects' interest in learning also increased (Question 4). However, this depended greatly on service time and whether they could persist with a healthy diet, because some of the interest derived from their curiosity about the system and sense of accomplishment at persisting with a healthy diet.

In terms of behavior promotion, the positive impact was limited (Questions 8–12). The lower scores of Question 8, Question 10, and Question 11 showed that determining how to help users persist in healthy eating habits is still a problem. However, many subjects still believed that their diet had become healthier than before. Although many of them could not persist in healthy eating, they still chose some healthy foods more or less, or avoided some foods that were bad for them. Many of the subjects mentioned that the types of food they consumed increased while using the system, especially some foods they did not like before. Sixty-three percent of the participants reduced the consumption of meat products and junk food (e.g., barbecue, fried chicken, sweet drinks, unhealthy snacks, salted products, etc.). Additionally, 51% of participants increased their consumption of vegetables, fruits, and cereals.

Finally, the subjects' attitudes toward the overall system were analyzed (Questions 13–16). Most subjects expressed satisfaction and were willing to continue using the system. Only six participants mentioned that they did not want to continue using the system. In addition, participants made many comments and suggestions on the system level. One of the problems was that there is not currently enough knowledge, so some symptoms could not be searched and the descriptions of some entities were too brief. Another problem was that the concepts could be expanded. At the application level, many participants hoped that more interesting applications and a better interface could be provided.

5. Discussion

In all three evaluated aspects (i.e., knowledge, behavior, and system evaluation), this work was rated positively by participants. Subjects gained knowledge from this system, reduced their consumption of junk food, and increased their consumption of green foods. The best ratings were given in terms of knowledge promotion, especially in Question 1. The overview of the whole system was also very well reviewed, and users gave some suggestions, which can be seen as the guidance of future work. However, in terms of behavior promotion, the positive evaluation was limited. The lower scores of Questions 8, 10, and 11 show that some problems should be solved in healthy diet promotion. More discussions can be seen as follows.

In terms of knowledge promotion, some advantages are analyzed through users' answers, which is also the innovation and contribution of the work. First, the results of interviews showed that all subjects gained new health knowledge through this system, because the knowledge graph collated food knowledge from multiple data sources containing multiple concepts, such as nutrition, symptoms, and crowds, and involved multidimensional knowledge including nutrition, TCM, food categories, and cooking methods. So, even a person with a good understanding of one aspect of health knowledge could learn other aspects from this system. This can explain that why Question 1 received a very positive score. Second, many of the participants determined that the knowledge graph in this work has more clear relationships between concepts, which can search and browse directly, while these relationships in other platform may be hidden in the description. This conveys the excellent knowledge integration and management capacity of the knowledge graph: it can integrate other data sources and store, manage, and represent data with a graph structure. Compared with other schemas, it can show knowledge more comprehensively, especially the relationships between knowledge nodes. In addition, the storage structure of the graph can also support faster response speed. These are also the reasons that why the system improved subjects' retrieval and learning efficiency, as shown in their responses to Questions 3 and 5. As one participant who gave a high evaluation of this work mentioned: "One of the advantages of this system is that the relationships between the entities are very clear and comprehensive. For example, in the past, if I wanted to search for foods that are good for a certain symptom, I needed to search for many websites, because there were many different results on each website, which need to be combined to get a comprehensive understanding. Besides, if I want to search for nutrition and food information, I need to go to a special food nutrition website, and if I want to search for symptoms and diseases and food information, I need to go to the medical website. This work can integrate these retrievals". Finally, different from professional knowledge bases [32–34], the knowledge graph built in this paper extracted colloquial terms, which are suitable for non-professionals to search and learn. Besides, Chinese food culture can attract users in this cultural circle. Several subjects who were interested in TCM said: "It was difficult to understand the descriptions of foods and curative effect in professional TCM platform, because they are too professional, and many data sources even use ancient Chinese language directly. This system uses network diagrams to represent relationships and shows food attributes in plain language, which is very suitable for amateurs to search".

Some problems can also be extracted from the questionnaire. One is that compared with some existing healthcare knowledge bases [37,38], the information integrated in this work is not very complete, so some symptoms could not be searched and the descriptions of some entities were too brief. This is why Question 2 did not have a high score—some users were uncertain that the diet knowledge in this work is richer and broader than other platforms. One of the reasons is that the available structured data sources of healthy diet in Chinese is much less than in English. So, this paper designed data processing methods to extract knowledge from natural language sentences, which allows a knowledge graph to be built from more open internet data sources. This is the advantage of this paper. Meanwhile, in the current version of the system, some data sources (e.g., existing medical knowledge bases, professional scientific papers, and online encyclopedia data) were neglected and will be added to the knowledge graph in future. Another problem is about the learning interest of users in Question 4. With the passage of time of using the system, the interest of participants decreased to a great extent, which means that the system needs to constantly launch new functions to maintain their interest. It is also one of the reasons that why behavior promotion questions got less-positive attitudes.

In terms of behavior promotion, the system can promote users' health behavior in a way by providing them with access to diet knowledge to change their diet decisions. "Because of my frequent eye strain, this system recommended carrots to me. In the beginning, I ignored this reminder because I didn't like to eat vegetables, but now I decided to try to eat it and change my diet habit". Another subject said: "It troubles me a lot that every day I need to think about what to eat for every meal. So I always eat the same kind of food for a long time. This system recommended me many

different dishes". Additionally, 63% of the participants who had a dietary habit that was high in sugar, salt, and fat had an obvious change in their dietary structure, and 51% of participants increased their consumption of vegetables, fruits, and cereals. This showed that this system is helpful for promoting a balanced diet and reducing the consumption of meat products and junk food. Those who had a strong desire to lose weight were more likely to change and keep a balanced diet, and people without this goal showed less changes.

After learning some knowledge about healthy diet, many subjects very actively reduced their unhealthy food consumption, such as barbecue, fried chicken, and high-sugar drinks. However, how long this persists remains a question, which is why Questions 8, 10, and 11 got lower scores. One third of participants had little or no confidence that they would persist in a healthy diet for a long time. The reasons why they could not were many and varied, including dietary bias, complicated cooking methods, busy work, convenient take-out, fast food, and so on. In addition, situations such as personality, health awareness, economic conditions, family influence, and physical health also affected whether people could persist in a healthy diet. Due to the complex factors, it is difficult to completely change bad eating habits and promote a healthy diet only by using this system. Besides, whether users can develop healthy diet habits also requires longer observation. Now, some other works had a beneficial effect on healthy behavior intervention [27–31]. Elements of gamification, social networks, and participation of experts or teachers were added to these systems to keep users on a healthy diet. In future work, a research prospect is to combine the knowledge management method in this work with these intervention methods to get better behavior promotion.

Finally, for the overview of the whole system, only six subjects did not want to use this system. The mainly reasons included a lack of interest, difficulty in persisting, and life attitude. One participant said that she did not like to plan too carefully for her daily diet and she just want to do it according to her own habits. Another subject said that it is hard to insist on eating foods she does not like, even if they were recommended by the system. In addition, through Questions 15 and 16, some suggestions were extracted that can guide future work. Firstly, future work will integrate more data sources and extract more entities and relationships to improve the knowledge graph. Secondly, we will refine the definition of the data schema and expand the types of concepts and relationships. For example, it is hoped that the food recommendation function will consider other factors such as season, climate, geographical location, body parts, religious culture, exercise, and so on. Finally, at the application level, many participants hoped that more interesting applications and a better interface could be provided. At present, although this system can enable users to quickly search for some information, how to realize their sustainable learning, and make them insist on a healthy diet is still an important question.

The limitations of this work should be discussed. On the cultural level, in this work, a portion of knowledge is based on Chinese diet culture and TCM theory, which is inconvenient for people who are not in this cultural circle or distrust TCM to learn and understand. Additionally, TCM theory also has limitations in healthcare. There are many other different dietary cultures and healthcare theories in the world. In the future, this work will conduct more investigations about different healthy dietary cultures and design a multicultural diet knowledge graph model.

6. Conclusions

This paper designed data schema, integrated data from multiple data sources, and built a healthy diet knowledge graph with the concepts food material, dish, nutritional element, symptom, crowd, and TCM culture in China, showing a whole dietary health knowledge system by linking these concepts with multiple relationships. Then, as an approach to national healthy eating education, this work an implemented a semantic retrieval and recommendation application based on the knowledge graph to provide knowledge to users. The questionnaires and preliminary interview results showed that most people had positive comments on the three dimensions of knowledge promotion, behavior promotion, and system overview. This study helped users to improve their efficiency of information acquisition and scope of knowledge learning and promoted healthy diet behavior to some extent.

This work helps users to accelerate their retrieval and learning of healthy diet knowledge and to understand knowledge more comprehensively based on the knowledge graph. Firstly, the concepts from various fields give users a comprehensive view. Secondly, the network can show clear knowledge relationships. Thirdly, more accessible information on TCM theory is provided for amateur users. Finally, the storage and the knowledge representation of the knowledge graph make users retrieve and learn more quickly and efficiently. This paper contributes to healthcare and national sustainable development through the popularization of healthy diet knowledge. This education can help people to gain knowledge and keep a balanced diet to prevent disease, which lays a foundation against the negative influence of the environment from the dramatic increase of meat and junk food consumption, and can help to reduce the healthcare and socioeconomic costs incurred from diseases that are caused by unhealthy dietary structure.

The limitations of the work are as follows. Firstly, at the knowledge graph level, the data integrated in the data base are limited. More data of different types and sources should be integrated, and the concepts and relationships should be expanded and given continued improvement. Secondly, more solutions to how to keep users on a healthy diet are needed, based both on new technologies and on other methods of healthy education and behavior promotion. In addition, at the cultural level, the main portion of knowledge is based on Chinese diet culture and TCM theory, which makes it difficult for people who are not in this cultural circle or who distrust TCM to use the system for learning.

Future work includes, firstly, improving the schema and sources of the data in the knowledge graph, including adding the concepts of season, location, exercise, mentality, and so on; mining more relationships between food and these concepts; and integrating more data sources, including professional books and encyclopedias, to provide users with more abundant knowledge. Particularly, more relationships between environment and food should be added to the knowledge graph. For example, the greenhouse gas emissions of each food product could be added to remind users of the environmental impacts of their consumption. Second, this work will develop more knowledge-based applications and conduct in-depth analysis of the reasons why users cannot adhere to a healthy diet. The design of the functions will focus on cultivating users' interests and goals by not only focusing on knowledge acquisition, but also on promoting healthy diet behavior. Finally, at present, the knowledge graph and system functions include Chinese food and dietary culture, and in future versions, more dietary cultures from around the world will be included.

Author Contributions: All authors have contributed to the intellectual content of this paper. Y.C. designed and conducted the research and wrote the manuscript. Y.C. and C.Y. designed and built the knowledge graph. C.Y. implemented the retrieval platform. X.Q. acquired and analyzed data. H.X. conducted the program, designed the research, and helped revise the manuscript.

Conflicts of Interest: The authors declare no conflict of interest.

References

1. Nations, U. *Goal 3: Ensure Healthy Lives and Promote Well-Being for All at All Ages*; United Nations: New York, NY, USA, 2015.
2. Clonan, A.; Roberts, K.E.; Holdsworth, M. Socioeconomic and demographic drivers of red and processed meat consumption: Implications for health and environmental sustainability. *Proc. Nutr. Soc.* **2016**, *75*, 367–373. [CrossRef] [PubMed]
3. Bradbury, K.E.; Appleby, P.N.; Key, T.J. Fruit, vegetable, and fiber intake in relation to cancer risk: Findings from the European Prospective Investigation into Cancer and Nutrition (EPIC). *Am. J. Clin. Nutr.* **2014**, *100* (Suppl. 1), 394S–398S. [CrossRef] [PubMed]
4. Mozaffarian, D.; Hao, T.; Rimm, E.B.; Willett, W.C.; Hu, F.B. Changes in diet and lifestyle and long-term weight gain in women and men. *N. Engl. J. Med.* **2011**, *364*, 2392–2404. [CrossRef] [PubMed]
5. Martin, C.; Butelli, E.; Petroni, K.; Tonelli, C. How can research on plants contribute to promoting human health? *Plant Cell* **2011**, *23*, 1685–1699. [CrossRef] [PubMed]

6. Liu, R.H. Dietary bioactive compounds and their health implications. *J. Food Sci.* **2013**, *78* (Suppl. 1), A18–A25. [CrossRef] [PubMed]
7. Popkin, P.M.; Kim, S.; Rusev, E.R.; Du, S.; Zizza, C. Measuring the full economic costs of diet, physical activity and obesity-related chronic diseases. *Obes. Rev.* **2006**, *7*, 271–293. [CrossRef] [PubMed]
8. Marlow, H.J.; Hayes, W.K.; Soret, S.; Carter, R.L.; Schwab, E.R.; Sabate, J. Diet and the environment: Does what you eat matter? *Am. J. Clin. Nutr.* **2009**, *89*, 1699S–1703S. [CrossRef] [PubMed]
9. World Bank. World Development Indicators (WDI). 2013. Available online: http://databank.worldbank.org/data/reports.aspx?source=world-development-indicators (accessed on 10 September 2018).
10. Fukase, E.; Martin, W. Who will feed China in the 21st century? Income growth and food demand and supply in China. *J. Agric. Econ.* **2016**, *67*, 3–23. [CrossRef]
11. Popkin, P.M.; Horton, S.; Kim, S.; Mahal, A.; Jin, S. Trends in Diet, Nutritional Status, and Diet-related Noncommunicable Diseases in China and India: The Economic Costs of the Nutrition Transition. *Nutr. Rev.* **2010**, *59*, 379–390. [CrossRef]
12. Song, D.; Xia, Y.; Wang, R.; Xu, H. Using Traditional Chinese Medicine Ideas as a Mechanism to Engage People in Health Awareness. *Sustainability* **2018**, *10*, 2702. [CrossRef]
13. National Health Commission of the People's Republic of China. *Annual Statistics of China's Health Care*; People's Medical Publishing House: Beijing, China, 1987; ISBN 140-485-408.
14. Vuong, Q.-H.; Ho, T.-M.; Nguyen, H.-K.; Vuong, T.-T. Healthcare consumers' sensitivity to costs: A reflection on behavioural economics from an emerging market. *Palgrave Commun.* **2018**, *4*, 70. [CrossRef]
15. Fang, X.H.; Kronmal, R.A.; Li, S.C.; Longstreth, W.T., Jr.; Cheng, X.M.; Wang, W.Z.; Wu, S.; Du, X.L.; Siscovick, D. Prevention of stroke in urban China: A community-based intervention trial. *Stroke* **1999**, *30*, 495–501. [CrossRef] [PubMed]
16. Chen, J.; Wu, X.; Gu, D. Hypertension and cardiovascular diseases intervention in the Capital Steel and Iron Company and Beijing Fangshan community. *Obes. Rev.* **2008**, *9* (Suppl. 1), 142–145. [CrossRef] [PubMed]
17. Barile, S.; Saviano, M.; Polese, F. Information asymmetry and co-creation in health care services. *Aust. Mark. J.* **2014**, *22*, 205–217. [CrossRef]
18. Organization, W.H. Shanghai declaration on promoting health in the 2030 Agenda for Sustainable Development. *Health Promot. Int.* **2017**, *32*, 7–8. [CrossRef] [PubMed]
19. Yao, C.; Hao, R.; Pan, S.; Wang, Y. Functional foods based on traditional Chinese medicine. In *Nutrition, Well-Being and Health*; InTech: London, UK, 2012.
20. Chen, K.; Lu, A.; Chen, S. Survey on the developing status of integrative Chinese and western medicine. *Chin. J. Integr. Tradit. West. Med.* **2006**, *26*, 485–488.
21. Tu, B.; Johnston, M.; Hui, K.-K. Elderly patient refractory to multiple pain medications successfully treated with integrative East–West medicine. *Int. J. Gen. Med.* **2008**, *1*, 3–6. [PubMed]
22. Ho, S.-C.; Tsai, P.-J. Comparison of the effects of "hot" and "cold" Chinese medicinal plants on the production of inflammatory mediators by RAW 264.7 cells. *J. Food Drug Anal.* **2004**, *12*, 120–127.
23. Lin, W.; Chan, W.; Hew, C. Superoxide and traditional Chinese medicines. *J. Ethnopharmacol.* **1995**, *48*, 165–171. [CrossRef]
24. Ou, B.; Huang, D.; Hampsch-Woodill, M.; Flanagan, J.A. When east meets west: The relationship between yin-yang and antioxidation-oxidation. *FASEB J.* **2003**, *17*, 127–129. [CrossRef] [PubMed]
25. Anderson, E.N. 'Heating'and'cooling'foods in Hong Kong and Taiwan. *Inf. Int. Soc. Sci. Counc.* **1980**, *19*, 237–268. [CrossRef]
26. Liu, G.; Cao, L. *Clinical Essentials of Contemporary Series Chinese Medicine: Chinese Herbal Medicine*; Hua Xia Publishing House: Beijing, China, 2001.
27. De la Torre Díez, I.; Garcia-Zapirain, B.; López-Coronado, M.; Rodrigues, J.J.; del Pozo Vegas, C. A new mHealth app for monitoring and awareness of healthy eating: Development and user evaluation by spanish users. *J. Med. Syst.* **2017**, *41*, 109. [CrossRef] [PubMed]
28. Ribeiro, D.; Machado, J.; Ribeiro, J.; Vasconcelos, M.J.M.; Vieira, E.F.; de Barros, A.C. SousChef: Mobile Meal Recommender System for Older Adults. In Proceedings of the ICT4AWE: International Conference on Information and Communication Technologies for Ageing Well and e-Health, Porto, Portugal, 28–29 April 2017; Springer: New York, NY, USA, 2017; pp. 36–45.

29. Agapito, G.; Simeoni, M.; Calabrese, B.; Caré, I.; Lamprinoudi, T.; Guzzi, P.H.; Pujia, A.; Fuiano, G.; Cannataro, M. DIETOS: A dietary recommender system for chronic diseases monitoring and management. *Comput. Methods Prog. Biomed.* **2018**, *153*, 93–104. [CrossRef] [PubMed]
30. Yang, H.K.; Kang, J.H.; Kim, O.H.; Choi, M.; Oh, M.; Nam, J.; Sung, E. Interventions for Preventing Childhood Obesity with Smartphones and Wearable Device: A Protocol for a Non-Randomized Controlled Trial. *Int. J. Environ. Res. Public Health.* **2017**, *14*, 184. [CrossRef] [PubMed]
31. Fadhil, A.; Matteotti, C.; Armellin, G.; Villafiorita, A.; Betti, D. CoachMe: A platform for promoting healthy lifestyle. In Proceedings of the 18th International Conference on Human-Computer Interaction with Mobile Devices and Services Adjunct (MobileHCI '16), Florence, Italy, 6–9 September 2016; pp. 1077–1080.
32. Bodenreider, O. The unified medical language system (UMLS): Integrating biomedical terminology. *Nucleic Acids Res.* **2004**, *32* (Suppl. 1), D267–D270. [CrossRef] [PubMed]
33. Donnelly, K. SNOMED-CT: The advanced terminology and coding system for eHealth. *Stud. Health Technol. Inform.* **2006**, *121*, 279. [PubMed]
34. Law, V.; Knox, C.; Djoumbou, Y.; Jewison, T.; Guo, A.C.; Liu, Y.; Maciejewski, A.; Arndt, D.; Wilson, M.; Neveu, V. DrugBank 4.0: Shedding new light on drug metabolism. *Nucleic Acids Res.* **2013**, *42*, D1091–D1097. [CrossRef] [PubMed]
35. Ruan, T.; Wang, M.; Sun, J.; Wang, T.; Zeng, L.; Yin, Y.; Gao, J. An automatic approach for constructing a knowledge base of symptoms in Chinese. *J. Biomed. Semant.* **2017**, *8*, 33. [CrossRef] [PubMed]
36. Dragoni, M.; Bailoni, T.; Eccher, C.; Guerini, M.; Maimone, R. A semantic-enabled platform for supporting healthy lifestyles. In Proceedings of the Symposium on Applied Computing, Marrakech, Morocco, 3–7 April 2017; ACM: New York, NY, USA, 2017; pp. 315–322.
37. Helmy, T.; Al-Nazer, A.; Al-Bukhitan, S.; Iqbal, A. Health, food and user's profile ontologies for personalized information retrieval. *Procedia Comput. Sci.* **2015**, *52*, 1071–1076. [CrossRef]
38. Ertugrul, D.C. FoodWiki: A Mobile App Examines Side Effects of Food Additives Via Semantic Web. *J. Med. Syst.* **2016**, *40*, 40–41.
39. Wang, Q.; Mao, Z.; Wang, B.; Guo, L. Knowledge graph embedding: A survey of approaches and applications. *IEEE Trans. Knowl. Data Eng.* **2017**, *29*, 2724–2743. [CrossRef]
40. Yang, Y.; Wang, G.; Pan, X.C. *China Food Composition*; Peking University Medical Press: Beijing, China, 2002; Volume 329.
41. Motik, B.; Patel-Schneider, P.F.; Parsia, B. OWL 2 Web Ontology Language: Structural specification and functional-style syntax. *W3C Recomm.* **2009**, *27*, 159.
42. Gennari, J.H.; Musen, M.A.; Fergerson, R.W.; Grosso, W.E.; Crubézy, M.; Eriksson, H.; Noy, N.F.; Tu, S.W. The evolution of Protégé: An environment for knowledge-based systems development. *Int. J. Hum.-Comput. Stud.* **2003**, *58*, 89–123. [CrossRef]
43. Pascanu, R.; Mikolov, T.; Bengio, Y. On the difficulty of training recurrent neural networks. *arXiv*, 2012; arXiv:1211.5063.
44. Hochreiter, S.; Schmidhuber, J. Long short-term memory. *Neural Comput.* **1997**, *9*, 1735–1780. [CrossRef] [PubMed]

© 2018 by the authors. Licensee MDPI, Basel, Switzerland. This article is an open access article distributed under the terms and conditions of the Creative Commons Attribution (CC BY) license (http://creativecommons.org/licenses/by/4.0/).